深圳市勋瑞光电科技有限公司

Xunrui photoelectric technology （shenzhen）CO,.LTD.

CERT. No. QAC0946535 (ISO9001)

CERT. No. HKG002005 (ISO14001)

Product Specification

Customer: _____

Model Name: H043IWQ40E3549B

Date: _____

Version: _____

■ **Preliminary Specification**

☐ **Final Specification**

For Customer's Acceptance

Approved by	Comment

Approved by	Reviewed by	Prepared by

深圳市勋瑞光电科技有限公司
Xunrui photoelectric technology （shenzhen） CO,.LTD.

Contents

1.Record of Revision.....3

2 .General Specifications.....4

3 .Input/Output Terminals.....5

4. Absolute Maximum Ratings.....6

5 .Electrical Characteristics.....6

6 .Interface Timing.....7

7. Optical Characteristics.....11

8 . Environmental / Reliability Tests.....14

9. Mechanical Drawing.....15

1 0.Packing.....18

11. Precautions For Use of LCD modules.....19

1. Record of Revision

Version	Revise Date	Content	Editor
1.0	2021/03/20	First Release.	Rich Liang

2 General Specifications

Feature		Spec
Characteristics	LCD Size	4.3 inch
	Display Format	480 (RGB) × 272
	Interface	24-bit RGB
	Color Depth	16.7M
	Technology type	a-Si
	Display Spec.	0.198 x 0.198
	Display Mode	Normally White
	Driver IC	ILI6485
	Surface Treatment	HC
	Viewing Direction	12 O'clock
	Gray Viewing Direction	6 O'clock
Mechanical	LCM (W x H x D) (mm)	105.45*67.15*3
	Active Area(mm)	95.04 x 53.856
	With /Without TSP	Without TSP
	Weight (g)	TBD
	LED Numbers	7 LEDs

Note 1: Viewing direction is following the data which measured by optics equipment.
Note 2: Requirements on Environmental Protection: RoHS
Note 3: LCM weight tolerance: +/- 5%

3 Input/Output Terminals

No.	Symbol	Description
1	VBL-	Backlight LED Cathode
2	VBL+	Backlight LED Anode.
3	GND	System Ground
4	VCC	Power supply for logic operation
5~12	R0~R7	Data bus
13~20	G0~G7	Data bus
21~28	B0~B7	Data bus
29	GND	System Ground
30	CLK	Pixel clock signal
31	DISP	Display on/off control
32	HSYNC	Horizontal Sync signal
33	VSYNC	Vertical Sync signal
34	DEN	Data Enable
35	NC	No connect
36	GND	System Ground
37	XR	TP pin XR
38	NC/YD	TP pin YD
39	NC/XL	TP pin XL
40	NC/YU	TP pin YU

4 Absolute Maximum Ratings

Item	Symbol	MIN	MAX	Unit	Remark
Supply Voltage	V_{DD}	-0.3	4.5	V	
Input Signal Voltage	V_{in}	-0.3	VDD+0.3	V	
Logic Output Voltage	V_{OUT}	-0.3	VDD+0.3	V	
Operating Temperature	T_{OPR}	-20	70	℃	
Storage Temperature	T_{STG}	-30	80	℃	

5 Electrical Characteristics

5.1 Operating conditions:

Parameter	Symbol	MIN	TYP	MAX	Unit	Remark
Power Voltage	V_{cc}	3.0	3.3	3.6	V	
Digital Operation Current	Icc		5		mA	
Gate On Power	V_{GH}	9	15	16	V	
Gate Off Power	V_{GL}	-11	-10	-7	V	
Vcom High Voltage	VcomH	3.26	-	5.8	V	Note1
Vcom low Voltage	VcomL	-2	-	-0.2	V	Note1

5.2 Driving Backlight

Item	Symbol	MIN	TYP	MAX	Unit	Remark
LED current	I_F	-	20	25	mA	
Power Consumption			448	525	mW	
LED Voltage	V_F	-	22.4	23.1	V	Note 1
LED Life Time	W_{BL}	50000	-	-	Hr	Note 2,3

Note 1 : There are 1 Groups LED

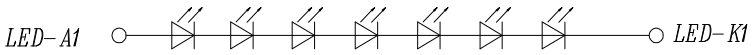

Note 2 : Ta = 25℃

Note 3 : Brightness to be decreased to 50% of the initial value

6 Interface Timing

6.1 Parallel RGB Data Format

480RGB X 272 Resolution Timing Table							
Item		Symbol	Min.	Typ.	Max.	Unit	Remark
DCLK Frequency		Fclk	8	9	12	MHz	
DCLK Period		Tclk	125	111	83	ns	
HSYNC	Period Time	Th	487	531	598	DCLK	
	Display Period	Thdisp	-	480	-	DCLK	
	Back Porch	Thbp	3	43	43	DCLK	By H_Blanking setting
	Front Porch	Thfp	4	8	75	DCLK	
	Pulse Width	Thw	2	4	75	DCLK	
VSYNC	Period Time	Tv	276	292	321	H	
	Display Period	Tvdisp	-	272	-	H	
	Back Porch	Tvbp	2	12	12	H	By V_Blanking setting
	Front Porch	Tvfp	2	8	37	H	
	Pulse Width	Tvw	2	4	37	H	

Note: 1.It is necessary to keep Tvbp =12 and Thbp =43 in sync mode. DE mode is unnecessary to keep it.

2.Thbp+Thfp >=7

6.2 SYNC Mode Timing Diagram

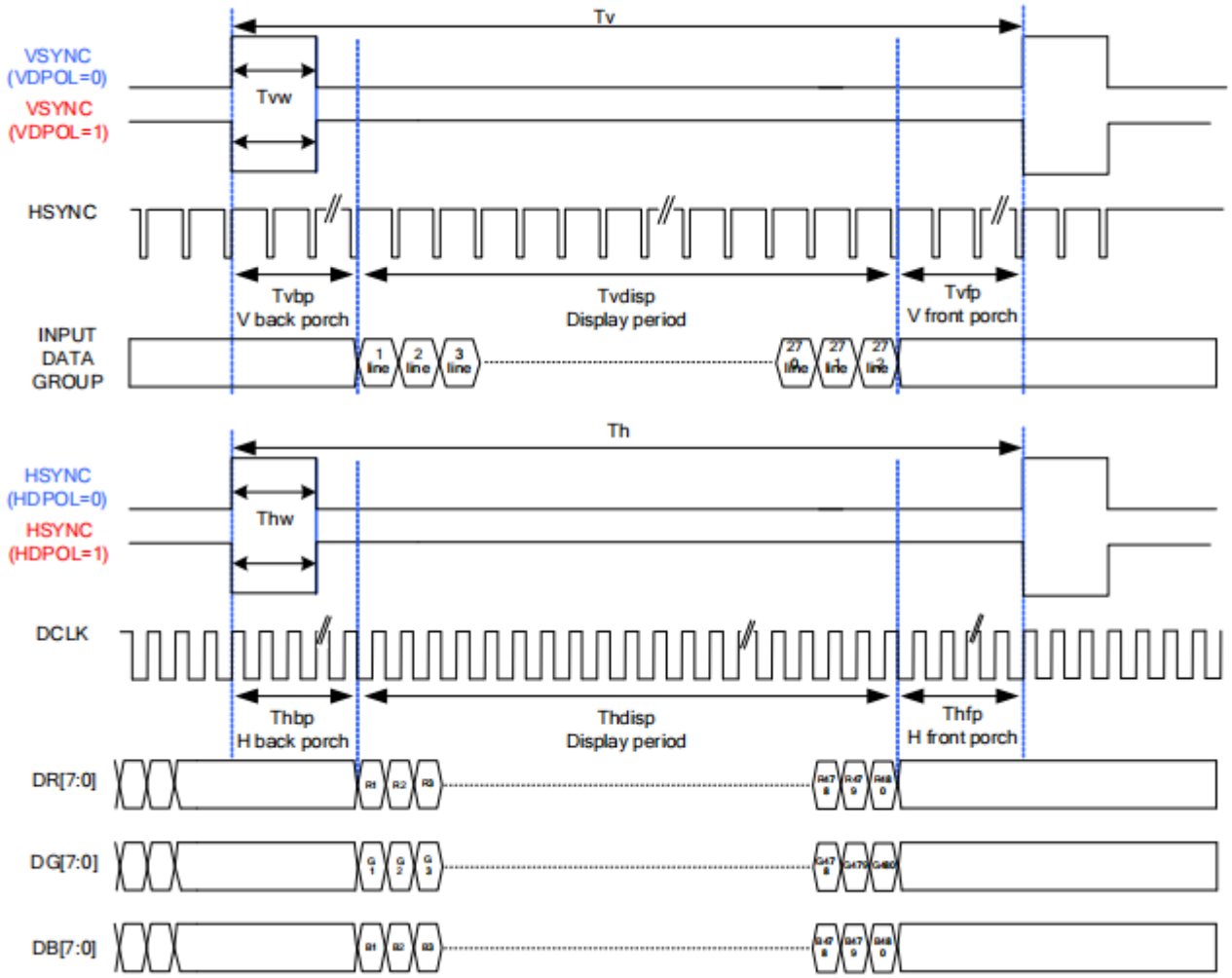

6.3 SYNC-DE Mode Timing Diagram

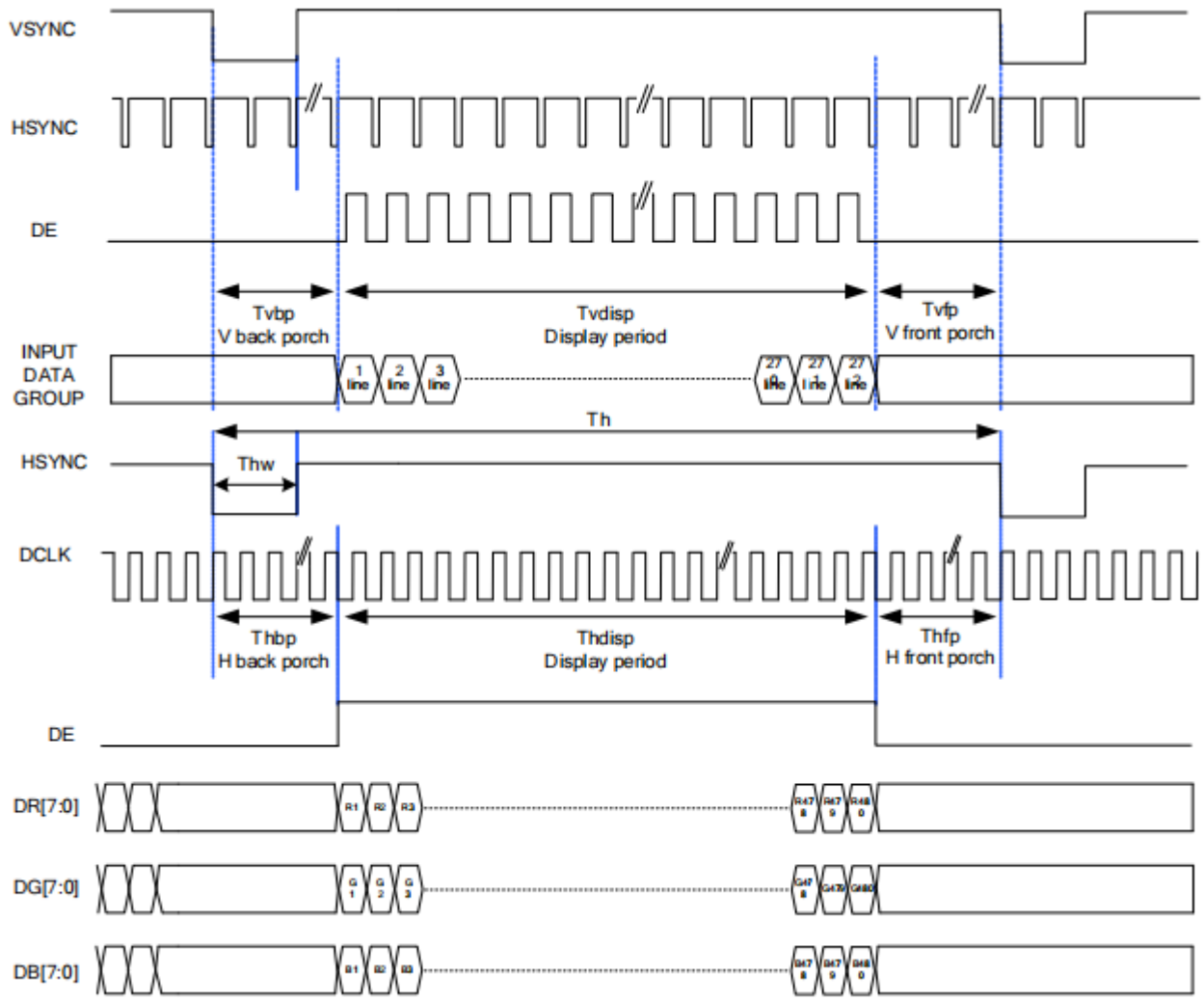

DE Mode Timing Diagram

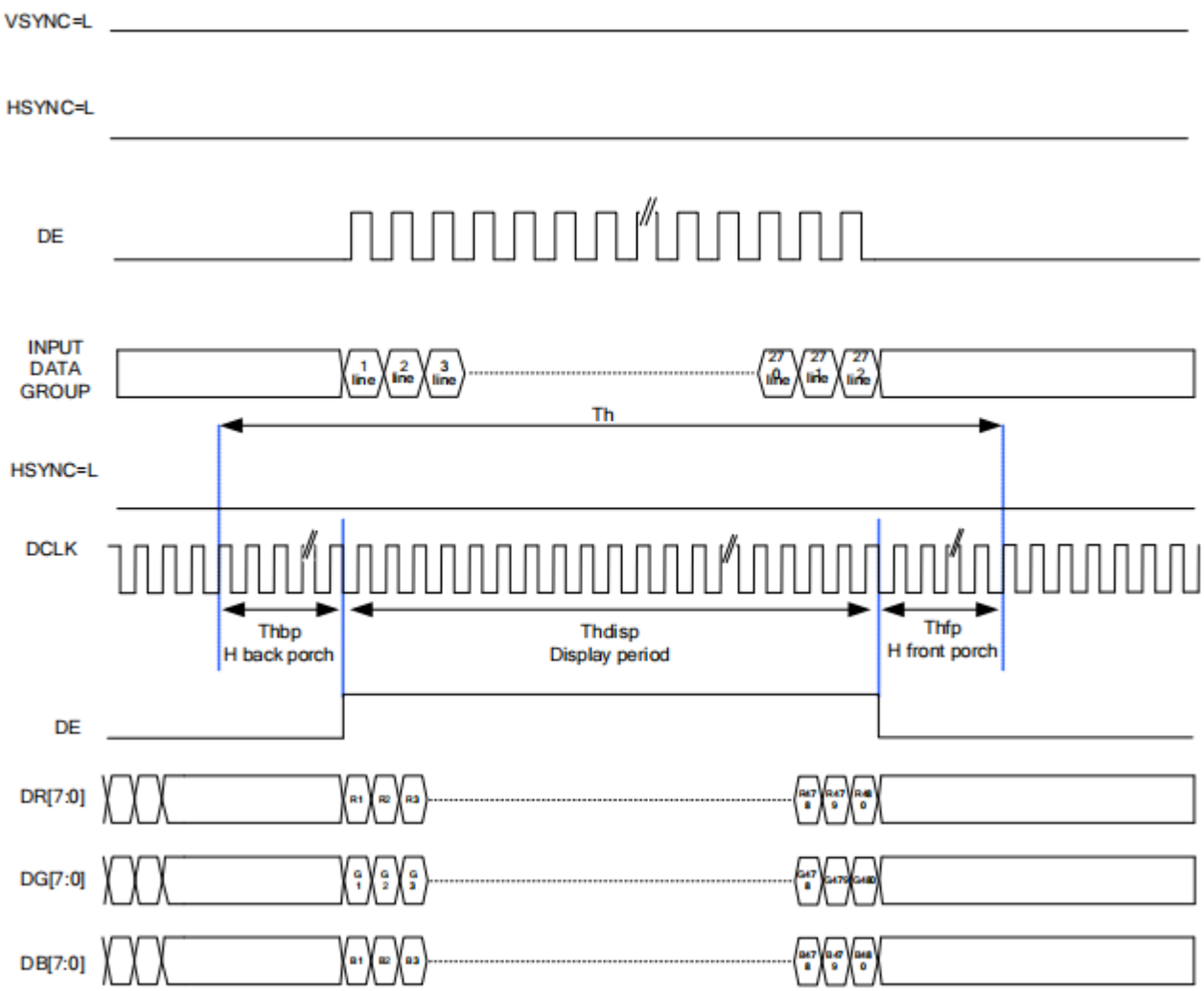

6.4 Clock and Data Input Timing Diagram

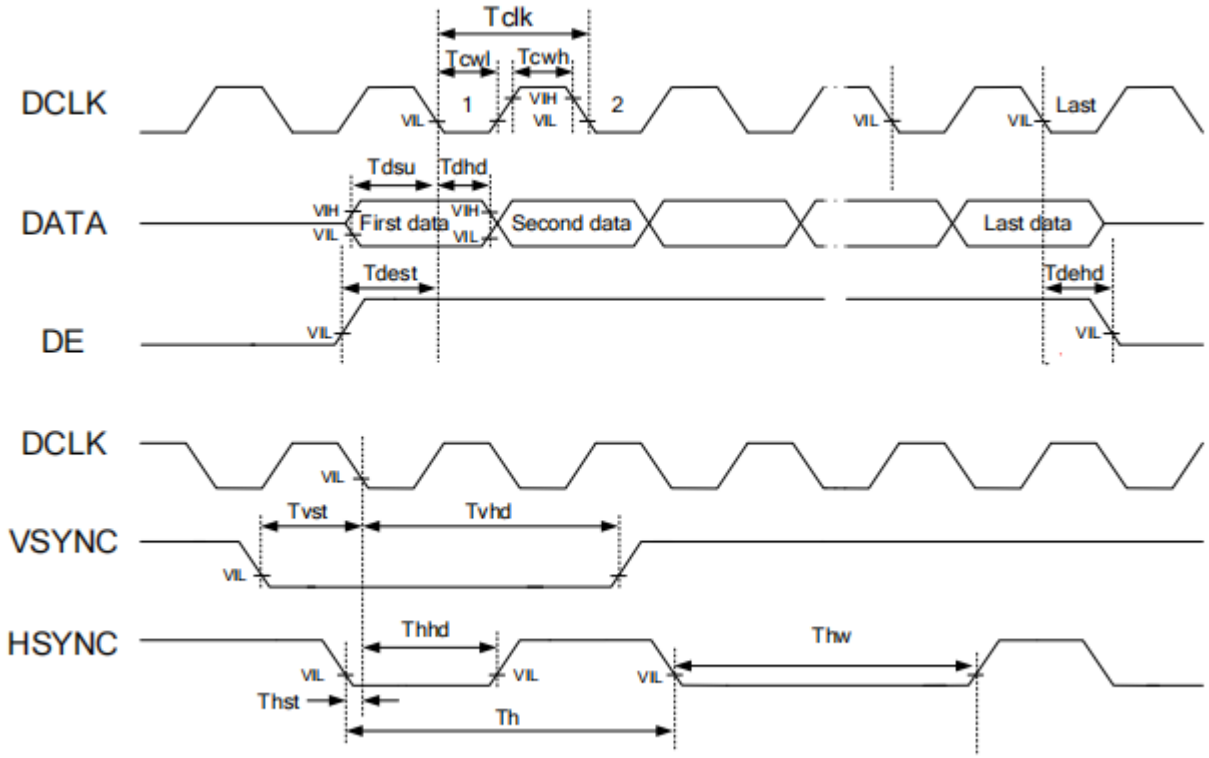

7 Optical Characteristics

Items		Symbol	Condition	Min.	Typ.	Max.	Unit	Remark
Viewing angles		θ_T	Center CR≥10	-	60	-	Degree.	Note2
		θ_B		-	70	-		
		θ_L		-	70	-		
		θ_R		-	70	-		
Contrast Ratio		CR	Θ =0	250	350		-	Note1, Note3
Response Time		T_{ON}	25° C	-	30	45	ms	Note1, Note4
		T_{OFF}		-	30	45		
Chromaticity	White	X_W	Backlight is on	0.282	0.312	0.342	-	Note1, Note5
		Y_W		0.319	0.349	0.379	-	
	Red	X_R		0.609	0.639	0.669	-	
		Y_R		0.314	0.344	0.374	-	
	Green	X_G		0.264	0.294	0.324	-	
		Y_G		0.557	0.587	0.617	-	
	Blue	X_B		0.102	0.132	0.162	-	
		Y_B		0.106	0.136	0.166	-	
Uniformity		U		75	80	-	%	Note1, Note6
NTSC					50		%	Note5
Luminance		L		300	350			Note1, Note7

Test Conditions:
1. IF= 20Ma (one channel),the ambient temperature is 25°C.
2. The test systems refer to Note 1 and Note 2.

Note 1: Definition of optical measurement system.
The optical characteristics should be measured in dark room. After 5 minutes operation, the optical Properties are measured at the center point of the LCD screen. All input terminals LCD panel must be ground when measuring the center area of the panel.

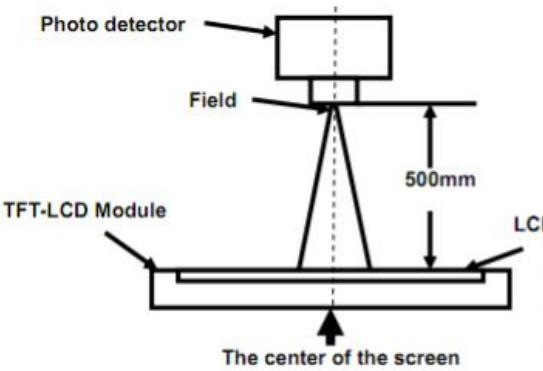

Item	Photo detector	Field
Contrast Ratio	BM-7A	1°
Luminance		
Chromaticity		
Lum Uniformity		
Response Time	SR-3A	2°

Note 2: Definition of viewing angle range and measurement system.
Viewing angle is measured at the center point of the LCD by CONOSCOPE (ergo-80).

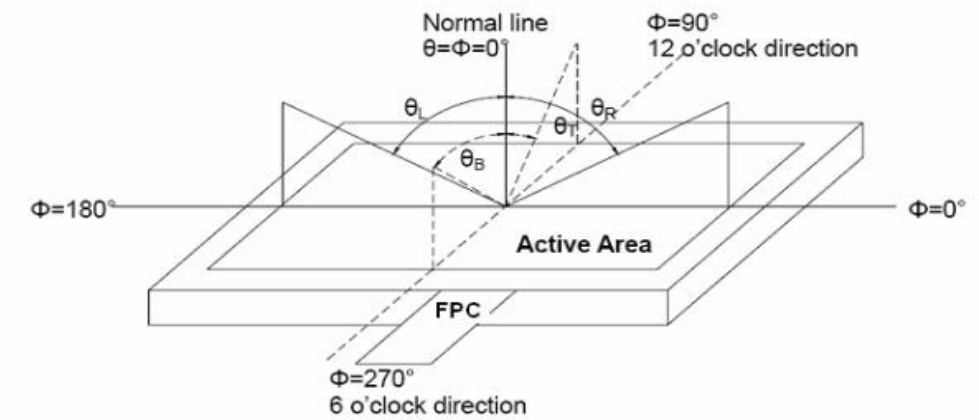

Fig. 1 Definition of viewing angle

Note 3: Definition of contrast ratio

$$\text{Contrast ratio (CR)} = \frac{\text{Luminance measured when LCD is on the "White" state}}{\text{Luminance measured when LCD is on the "Black" state}}$$

Note 4: Definition of Response time

The response time is defined as the LCD optical switching time interval Between “White” state and “Black” state. Rise time (TON) is the time between Photo detector output intensity changed from 90% to 10%. And fall time (TOFF) is The time between photo detector output intensity changed from 10% to 90%

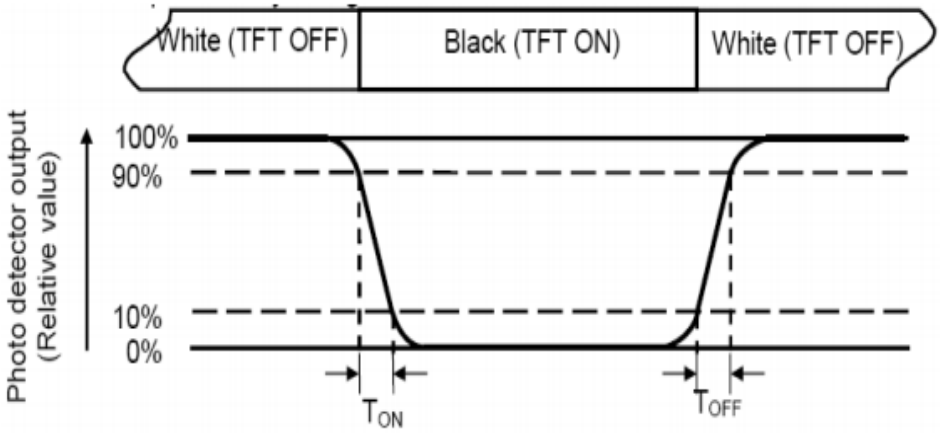

Note 5: Definition of color chromaticity (CIE1931)

Color coordinates measured at center point of LCD.

Note 6: Definition of Luminance Uniformity

Active area is divided into 9 measuring areas (Refer Fig. 2). Every measuring point is placed at the Center of each measuring area

Luminance Uniformity (U) = Lmin/ Lmax X100%

L-------Active area length W----- Active area width

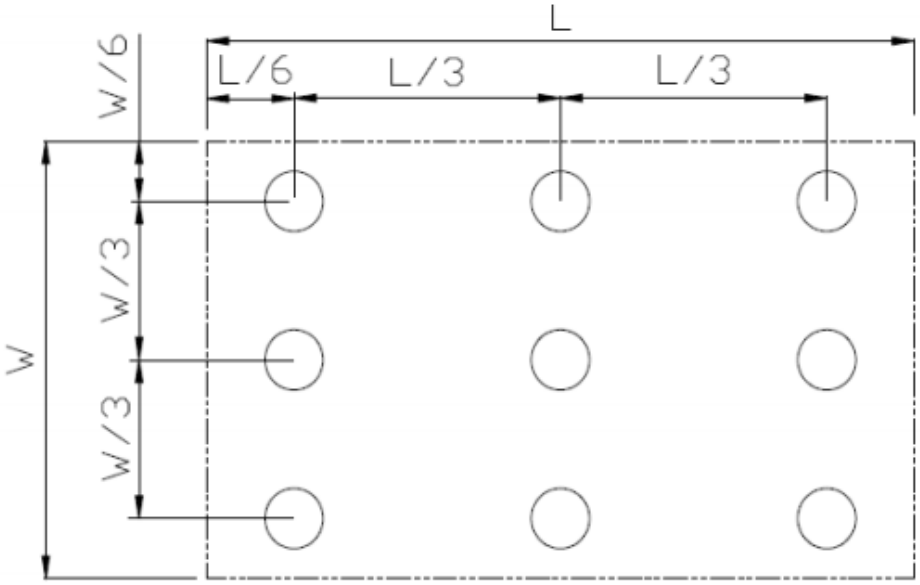

Fig. 2 Definition of uniformity

Lmax: The measured maximum luminance of all measurement position.

Lmin: The measured minimum luminance of all measurement position.

Note 7: Definition of Luminance:

Measure the luminance of white state at center point.

8 Environmental / Reliability Tests

No	Test Item	Condition	Remarks
1	High Temperature Operation	Ts= +70℃, 240hrs	Note 1 IEC60068-2-2, GB2423. 2-89
2	Low Temperature Operation	Ta= -20℃, 240hrs	Note 2 IEC60068-2-1 GB2423.1-89
3	High Temperature Storage	Ta= +80℃, 240hrs	IEC60068-2-2 GB2423. 2-89
4	Low Temperature Storage	Ta= -30℃, 240hrs	IEC60068-2-1 GB/T2423.1-89
5	High Temperature & Humidity Storage	Ta= +60℃, 90% RH max, 160 hours	IEC60068-2-3 GB/T2423.3-2006
6	Thermal Shock (Non-operation)	-30℃ 30 min ~ +80℃ 30 min Change time: 5min, 30 Cycle	Start with cold temperature, end with high temperature IEC60068-2-14, GB2423.22-87
7	Electro Static Discharge (Operation)	C=150pF, R=330 Ω, 5 points/panel Air:±8KV, 5 times; Contact: ±4KV, 5 times; (Environment: 15℃ ~ 35℃, 30% ~ 60%, 86Kpa ~ 106Kpa)	IEC61000-4-2 GB/T17626.2-1998
8	Vibration (Non-operation)	Frequency range: 10~55Hz, Stroke: 1.mm Sweep: 10Hz~55Hz~10Hz 2 hours for each direction of X .Y. Z. (package condition)	IEC60068-2-6 GB/T2423.5-1995
9	Shock (Non-operation)	60G 6ms, ± X, ±Y , ± Z 3 times for each direction	IEC60068-2-27 GB/T2423.5-1995
10	Package Drop Test	Height: 60 cm, 1 corner, 3 edges, 6 surfaces	IEC60068-2-32 GB/T2423.8-1995

Note: 1. T_S is the temperature of panel's surface.
2. Ta is the ambient temperature of sample.

9 Mechanical Drawing

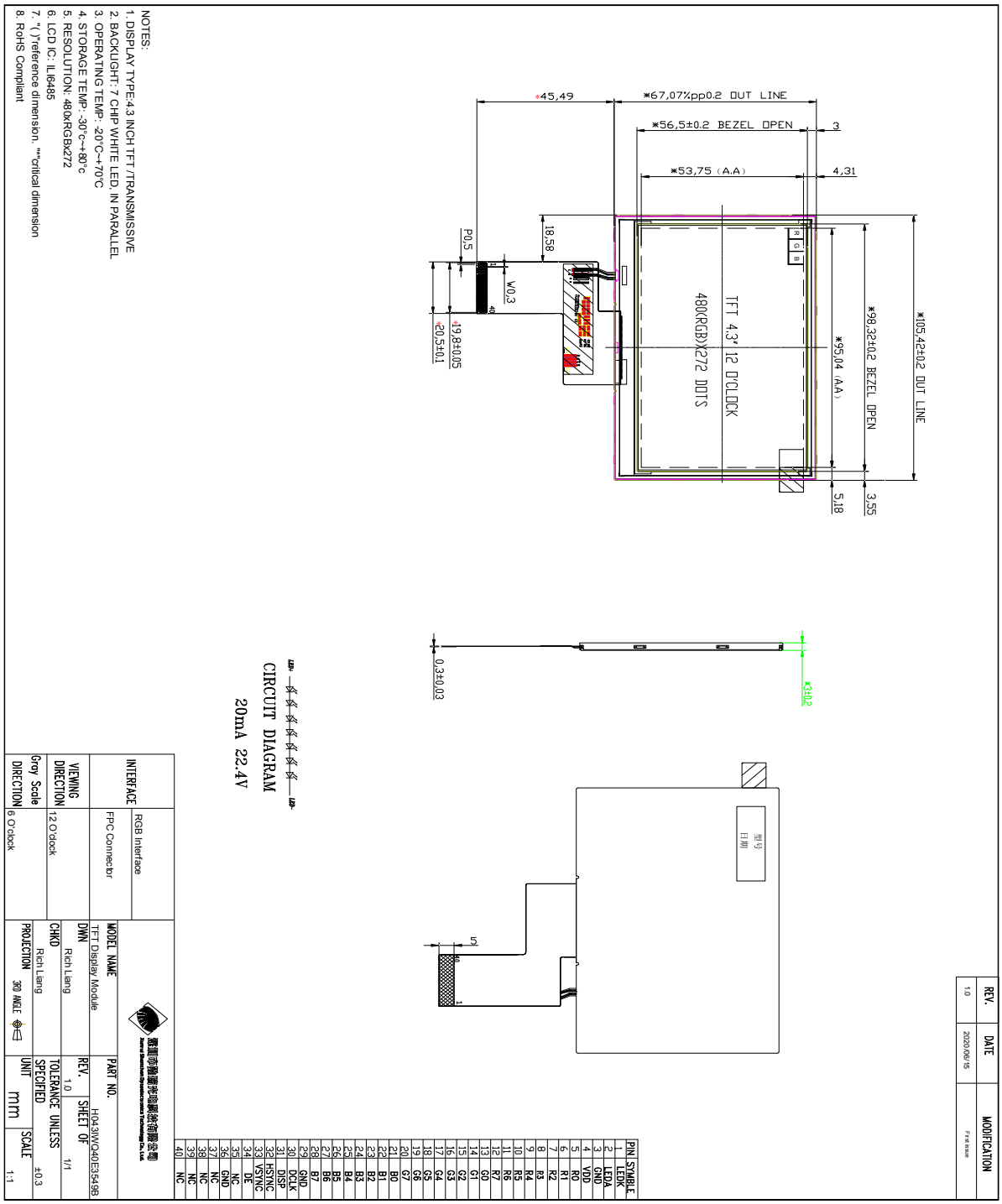

1 0.Packing

Packing Method

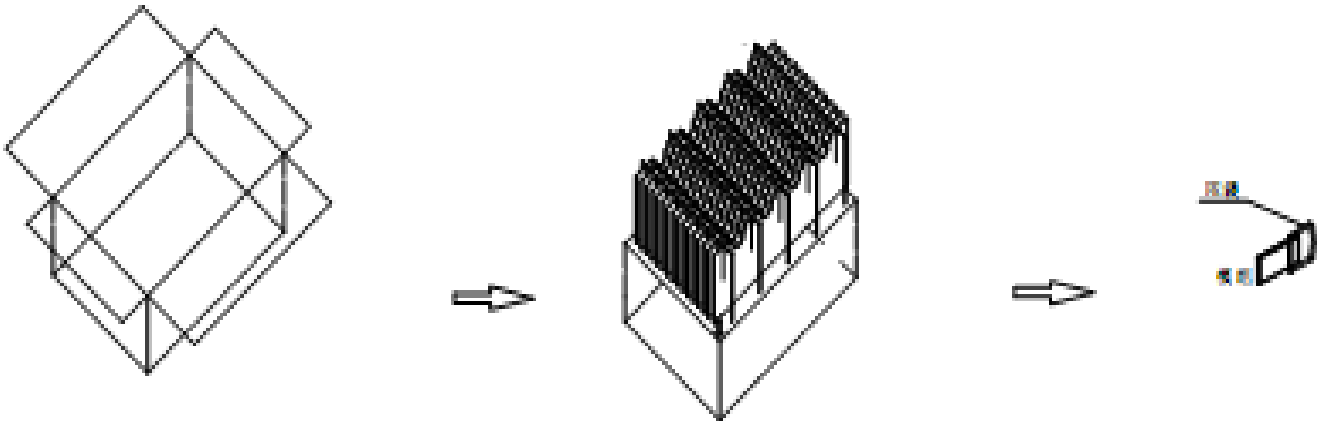

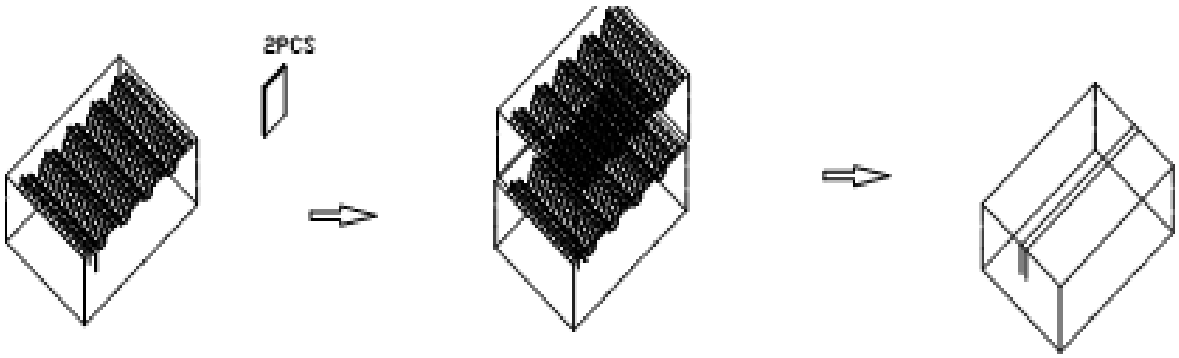

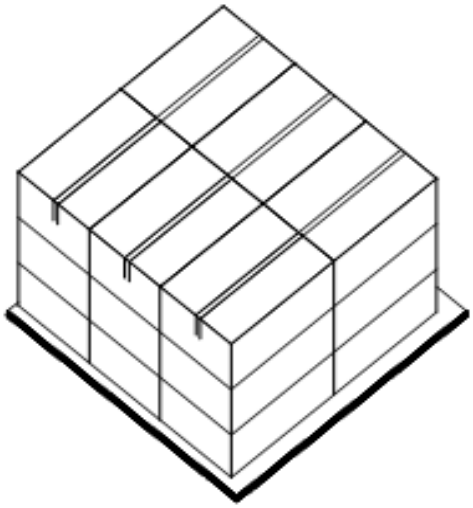

11. Precautions for Use of LCD modules

11.1 Handling Precautions

11.1.1. The display panel is made of glass. Do not subject it to a mechanical shock by dropping it from a high place, etc.

11.1.2. If the display panel is damaged and the liquid crystal substance inside it leaks out, be sure not to get any in your mouth, if the substance comes into contact with your skin or clothes, promptly wash it off using soap and water.

11.1.3. Do not apply excessive force to the display surface or the adjoining areas since this may cause the color tone to vary.

11.1.4. The polarizer covering the display surface of the LCD module is soft and easily scratched. Handle this polarizer carefully.

11.1.5. If the display surface is contaminated, breathe on the surface and gently wipe it with a soft dry cloth. If still not completely clear, moisten cloth with one of the following solvents:

- Isopropyl alcohol
- Ethyl alcohol

Solvents other than those mentioned above may damage the polarizer. Especially, do not use the following:
Water ； Ketene ； Aromatic solvents

11.1.6. Do not attempt to disassemble the LCD Module.

11.1.7. If the logic circuit power is off, do not apply the input signals.

11.1.8. To prevent destruction of the elements by static electricity, be careful to maintain an optimum work environment.

11.1.8.1. Be sure to ground the body when handling the LCD Modules.

11.1.8.2. Tools required for assembly, such as soldering irons, must be properly ground.

11.1.8.3. To reduce the amount of static electricity generated, do not conduct assembly and other work under dry conditions.

11.1.8.4. The LCD Module is coated with a film to protect the display surface. Be care when peeling off this protective film since static electricity may be generated.

11.2 Storage Precautions

11.2.1. When storing the LCD modules, avoid exposure to direct sunlight or to the light of fluorescent lamps.

11.2.2. The LCD modules should be stored under the storage temperature range If the LCD modules will be stored for a long time, the recommend condition is:

Temperature : 0℃ ～ 40℃ Relatively humidity: ≤80%

11.2.3. The LCD modules should be stored in the room without acid, alkali and harmful gas.

11.3 Transportation Precautions

The LCD modules should be no falling and violent shocking during transportation, and also should avoid excessive press, water, damp and sunshine.