深圳市勋瑞光电科技有限公司
Xunrui photoelectric technology （shenzhen）CO,.LTD.

Product Specification

Customer: _____

Model Name: H035BQ54I1K202

Date: _____

Version: _____

■ **Preliminary Specification**

☐ **Final Specification**

For Customer's Acceptance

Approved by	Comment

Approved by	Reviewed by	Prepared by

深圳市勋瑞光电科技有限公司
Xunrui photoelectric technology （shenzhen）CO,.LTD.

Contents

1.Record of Revision.....3

2 .General Specifications.....4

3 .Input/Output Terminals.....5

4. Absolute Maximum Ratings.....6

5 .Electrical Characteristics.....6

6 .Interface Timing.....7

7. Optical Characteristics.....11

8 . Environmental / Reliability Tests.....14

9. Mechanical Drawing.....15

1 0.Packing.....23

11. Precautions For Use of LCD modules.....24

1. Record of Revision

Version	Revise Date	Content	Editor
1.0	2019/12/02	First Release.	Rich Liang

2 General Specifications

Feature		Spec
Characteristics	LCD Size	3.5inch
	Display Format	320 (RGB) × 240
	Interface	24-bit RGB+SPI
	Color Depth	16.7M
	Technology type	a-Si
	Display Spec.	0.073 x 0.219
	Display Mode	Normally BLACK
	Driver IC	
	Surface Treatment	Haze 20%
	Viewing Direction	ALL
	Gray Viewing Direction	FREE
Mechanical	LCM (W x H x D) (mm)	76.9*63.9*3.26
	Active Area(mm)	70.08 x 52.56
	With /Without TSP	Without TSP
	Weight (g)	TBD
	LED Numbers	6 LEDs

Note 1: Viewing direction is following the data which measured by optics equipment.
Note 2: Requirements on Environmental Protection: RoHS
Note 3: LCM weight tolerance: +/- 5%

3 Input/Output Terminals

No.	Symbol	Description
1,2	VBL-	Backlight LED Cathode
3,4	VBL+	Backlight LED Anode.
5	YU	Touch panel up side
6	XR	Touch panel right side
7	NC	NC
8	RESET	Reset Signal pin (“Low” is enable)
9	SPENB	Chip select
10	SPCK	Serial Clock.
11	SPDA	Serial Data
12-19	B0~B7	Data bus
20-27	G0~G7	Data bus
28-35	R0~R7	Data bus
36	HSYNC	Line Synchronous Signal
37	VSYNC	Frame Synchronous Signal
38	DOTCLK	Dot-clock signal and oscillator source
39-40	NC	NC
41-42	VDD	Power supply for logic operation
43	YD	Touch panel bottom side
44	XL	Touch panel left side
45-47	NC	
48	IF2	Control the input data format/floating
49	IF1	Control the input data format
50	IF0	Control the input data format
51	NC	NC
52	DEN	Display enable signal
53-54	GND	System Ground

4 Absolute Maximum Ratings

Item	Symbol	MIN	MAX	Unit	Remark
Supply Voltage	V_{DD}	-0.3	5.0	V	
Input Signal Voltage	V_{in}	-0.3	VDD+0.3	V	
Logic Output Voltage	V_{OUT}	-0.3	VDD+0.3	V	
Operating Temperature	T_{OPR}	-20	70	℃	
Storage Temperature	T_{STG}	-30	80	℃	

5 Electrical Characteristics

5.1 Operating conditions:

Parameter	Symbol	MIN	TYP	MAX	Unit	Remark
Power Voltage	V_{cc}	3.0	3.3	3.6	V	
Digital Operation Current	Icc		8.6		mA	
Gate On Power	V_{COMH}	2.5	13.9	4.5	V	
Gate Off Power	V_{GH}	-	-13.6	15	V	
Vcom High Voltage	VcomH	-	3.9	-	V	Note1
Vcom low Voltage	VcomL	-	-1.2	-	V	Note1
Vcom level max	VcomA	-	-	6	V	

Note1. VcomH& VcomL：Adjust the color with gamma data. Vp-p should be higher then 4V.(Option 5V)

Note: Please power on following the sequence VCC VDD

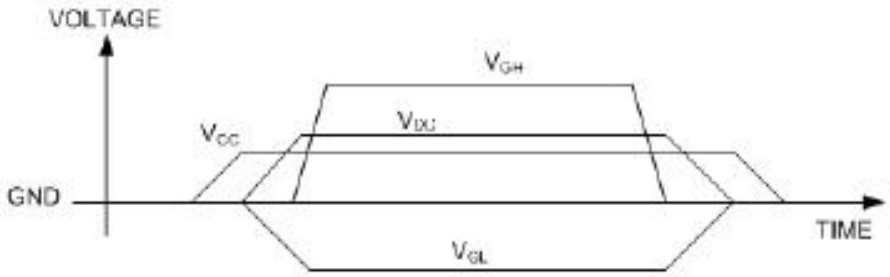

5.2 Driving Backlight

Item	Symbol	MIN	TYP	MAX	Unit	Remark
LED current	I_F	-	40		mA	
Power Consumption					mW	
LED Voltage	V_F		18		V	Note 1
LED Life Time	W_{BL}	-	TBD	-	Hr	Note 2,3

Note 1 : There are 2 Groups LED

Note 2 : Ta = 25℃

Note 3 : Brightess to be decreased to 50% of the initial value

6 Interface Timing

6.1 AC Electrical Characteristics

AC Characteristics
(Unless otherwise specified, Voltage Referenced to Vss, VDDIO= 2.2V, TA= 25℃)

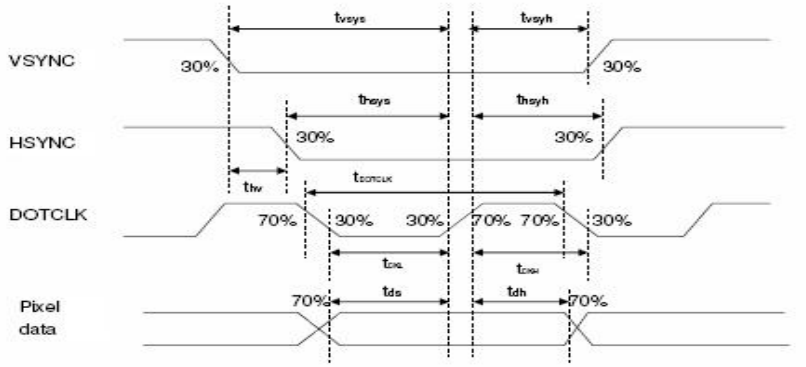

Figure 13. 1 Pixel Timing

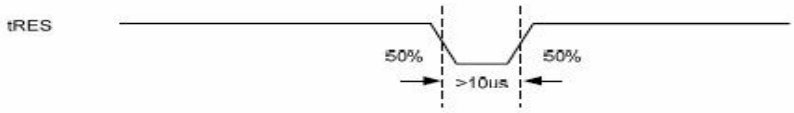

7.3.8 Parallel RGB Input Timing Table

Parallel 24-bit RGB Input Timing (PVDD=VDD=VDDI= 3.3V, AGND= 0V, TA=25°C)

Parallel 24-bit RGB Input Timing Table							
Item		Symbol	Min.	Typ.	Max.	Unit	Note
DCLK Frequency		Fclk	5	6	8	MHz	
DCLK Period		Tclk	125	167	200	ns	
HSYNC	Period Time	Th	325	371	438	DCLK	
	Display Period	Thdisp	-	320	-	DCLK	
	Back Porch	Thbp	3	43	43	DCLK	SYNC mode back porch control by H_BLANKING[7:0] setting Thbp= H_BLANKING[7:0]
	Front Porch	Thfp	2	8	75	DCLK	
	Pulse Width	Thw	2	4	43	DCLK	
VSYNC	Period Time	Tv	244	260	289	HSYNC	
	Display Period	Tvdisp	-	240	-	HSYNC	
	Back Porch	Tvbp	2	12	12	HSYNC	SYNC mode back porch control by V_BLANKING[7:0] setting Tvbp= V_BLANKING[7:0]
	Front Porch	Tvfp	2	8	37	HSYNC	
	Pulse Width	Tvw	2	4	12	HSYNC	

Note: It is necessary to keep Tvbp =12 and Thbp =43 in sync mode. DE mode is unnecessary to keep it.

Digital Parallal RGB interface

Signal	Item	Symbol	Min	Typ	Max	Unit
Dclk	Frequency	Tosc	-	156	-	ns
	High Time	Tch	-	78	-	ns
	Low Time	Tcl	-	78	-	ns
Data	Setup Time	Tsu	12	-	-	ns
	Hold Time	Thd	12	-	-	ns
Hsync	Period	TH	-	408	-	Tosc
	Pulse Width	THS	5	30	-	Tosc
	Back-Porch	Thb		38		Tosc
	Display Period	TEP	-	320	-	Tosc
	Hsync-den time	THE	36	68	88	Tsoc
	Front-Porch	Thf	-	20	-	Tosc
Vsync	Period	Tv	-	262	-	TH
	Pulse Width	Tvs	1	3	5	TH
	Back-Porch	Tvb	-	15	-	TH
	Display Period	Tvd	-	240	-	TH
	Front-Porch	Tvf	2	4	-	TH

Note: 1. Thp + Thb = 68, the user is make up by yourself.
2. Tv = Tvs + Tvb + Tvd + Tvf , the user is make up by yourself.
3.When SYNC mode is used,1st data start from 68th Dclk after Hsync falling

Digital Serial RGB interface

Signal	Item	Symbol	Min	Typ	Max	Unit
Dclk	Frequency	Tosc	-	52	-	ns
	High Time	Tch	-	78	-	ns
	Low Time	Tcl	-	78	-	ns
Data	Setup Time	Tsu	12	-	-	ns
	Hold Time	Thd	12	-	-	ns
Hsync	Period	TH	-	1224	-	Tosc
	Pulse Width	THS	5	90	-	Tosc
	Back-Porch	Thb		114		Tosc
	Display Period	TEP	-	960	-	Tosc
	Hsync-den time	THE	108	204	264	
	Front-Porch	Thf	-	60	-	Tosc
Vsync	Period	Tv	-	262	-	TH
	Pulse Width	Tvs	1	3	5	TH
	Back-Porch	Tvb	-	15	-	TH
	Display Period	Tvd	-	240	-	TH
	Front-Porch	Tvf	2	4	-	TH

Note: 1. Thp + Thb = 204, the user is make up by yourself.
2. Tv = Tvs + Tvb + Tvd + Tvf , the user is make up by yourself.
3. When SYNC mode is used, 1st data start from 204th Dclk after Hsync falling

CCIR601/656 Interface

Signal	Item	Symbol	Min	Typ	Max	Unit
Dclk	Frequency	Tosc	-	37	-	ns
	High Time	Tch	-	78	-	ns
	Low Time	Tcl	-	78	-	ns
Data	Setup Time	Tsu	12	-	-	ns
	Hold Time	Thd	12	-	-	ns

6.2 Waveform

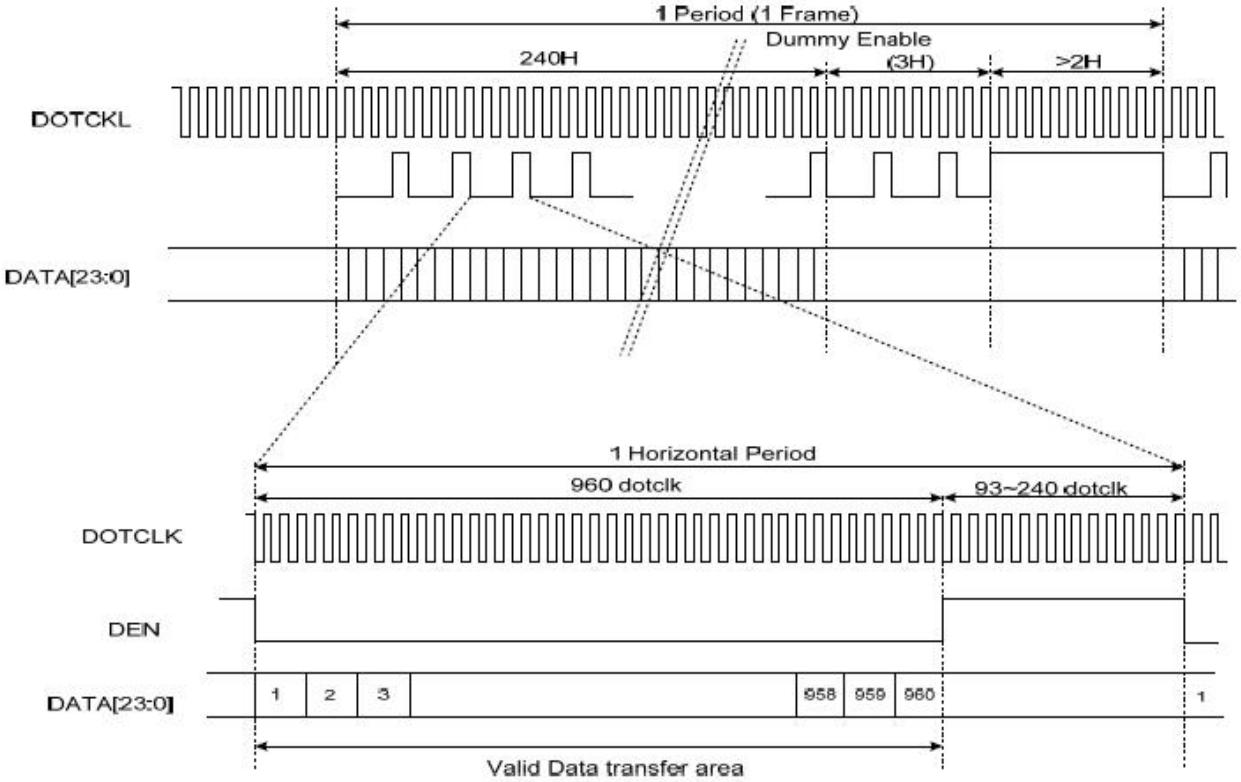

Figure 3 Data Transaction Timing in Serial RGB (8 bit) Interface (DE Mode)

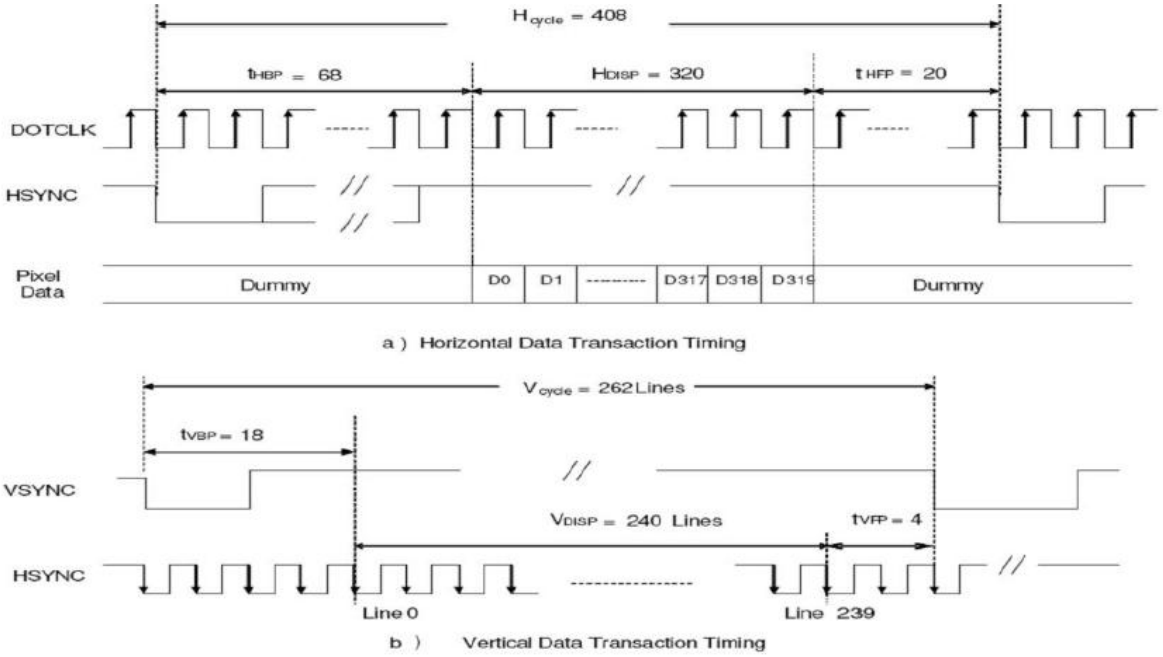

Figure 3 Data Transaction Timing in Parallel RGB (24 bit) Interface (SYNC Mode)

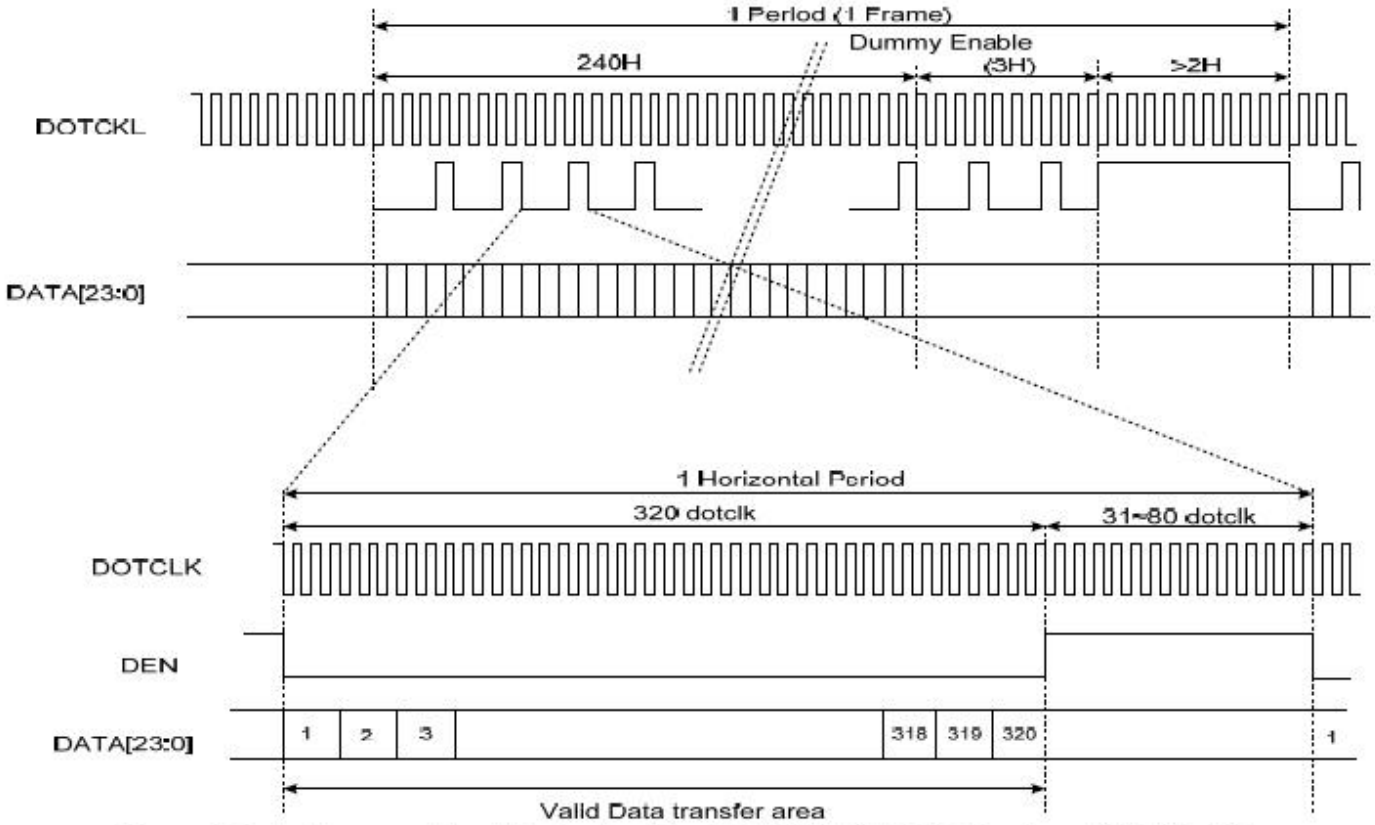

Figure 4 Data Transaction Timing in Parallel RGB (24 bit) Interface (DE Mode)

6.3 Clock and Sync waveforms

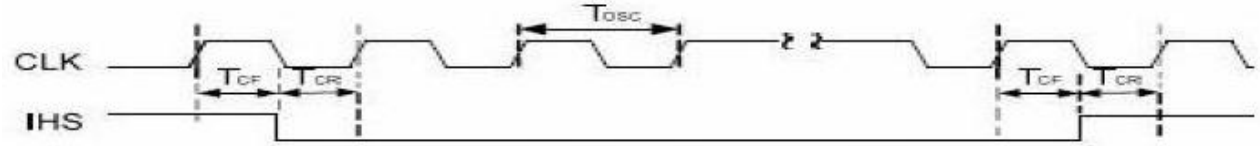

Figure 6 CLK and IHS timing waveform

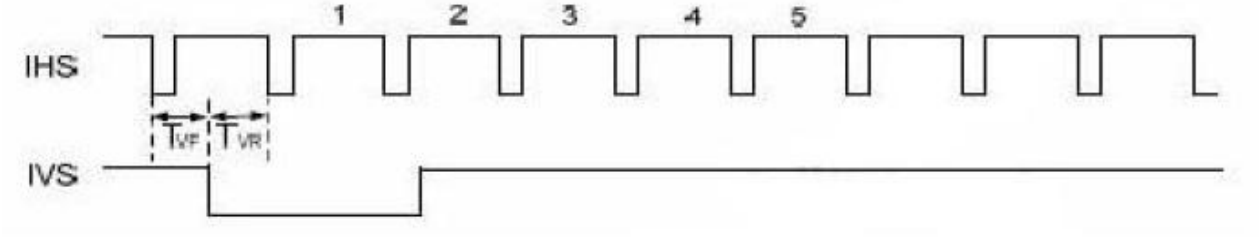

Figure 7 IHS and IVS timing waveforms

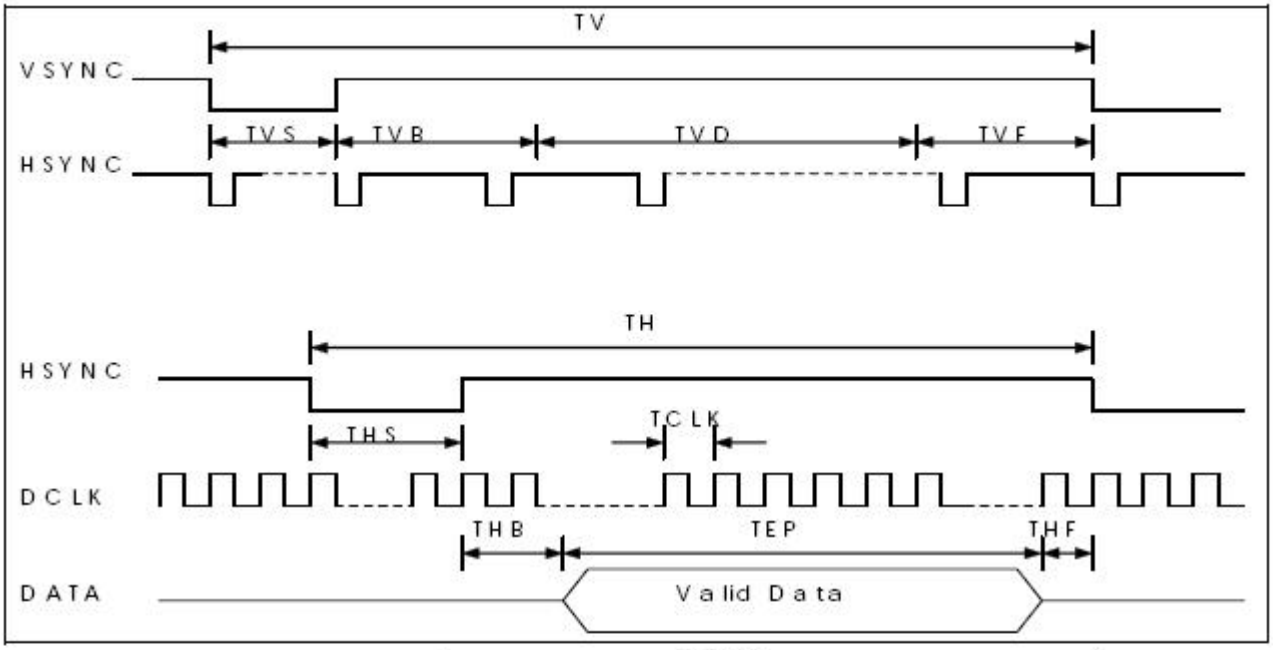

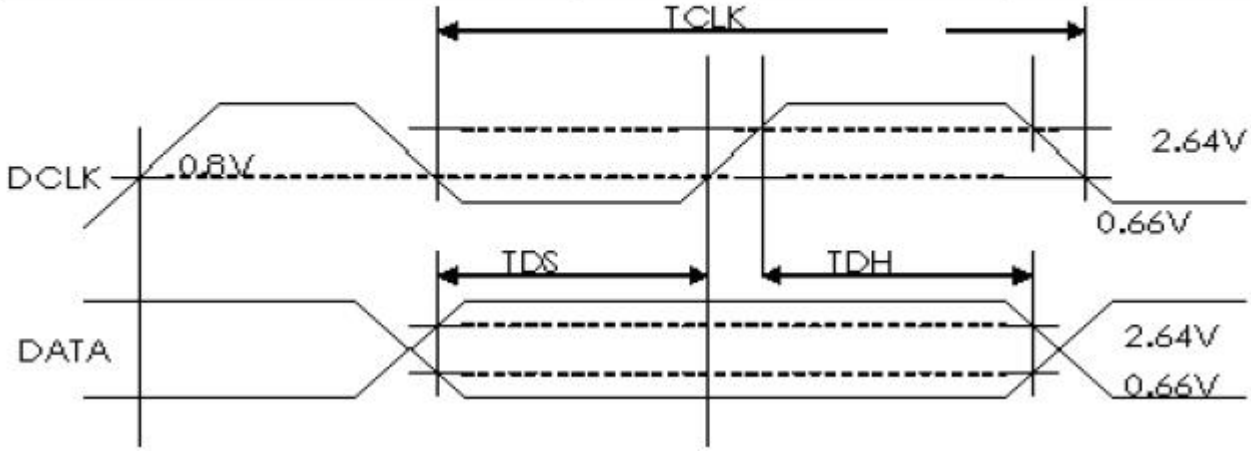

6.4 Input Data Timing (24 bit RGB mode for 960 x 240 @ SEL\[3:0] = 1100b)

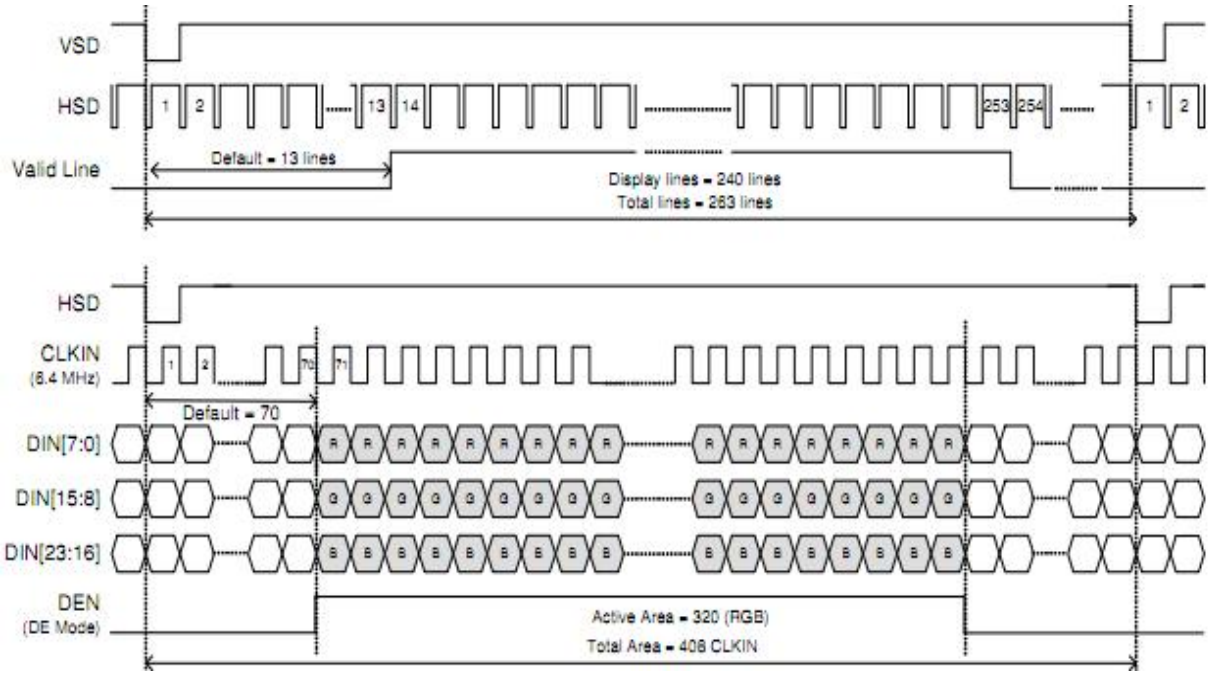

6.5 Vertical Timing Diagram (HV Mode)

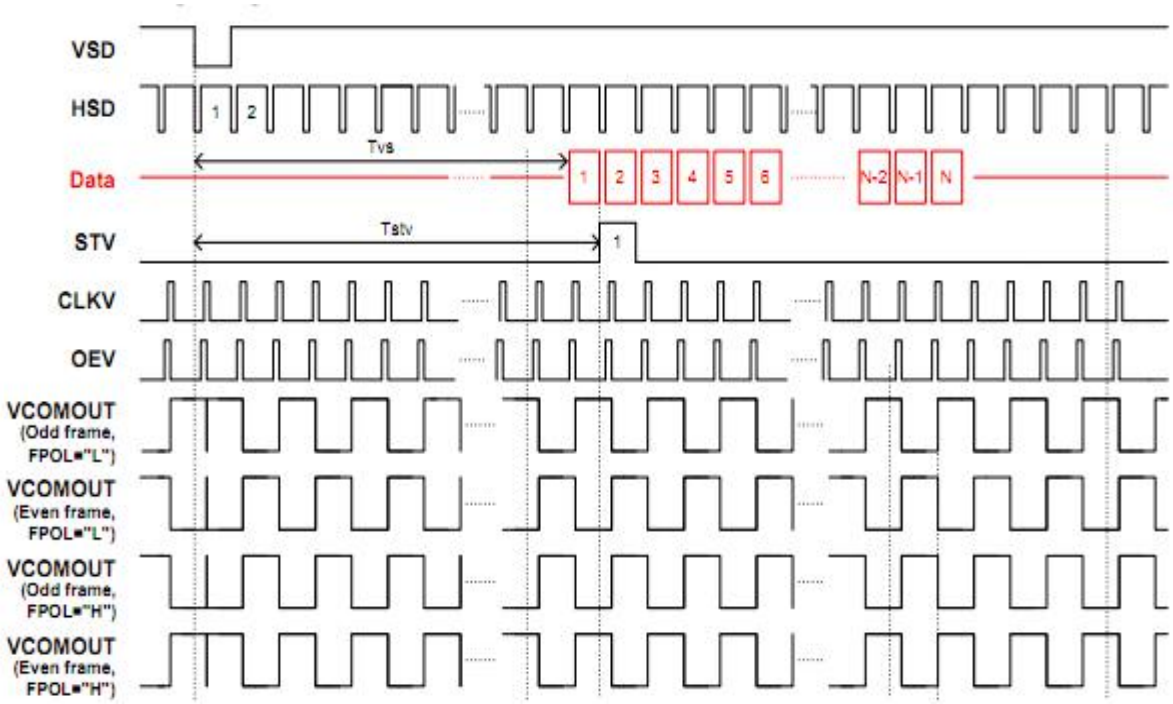

6.6 Vertical Timing Diagram (DE Mode)

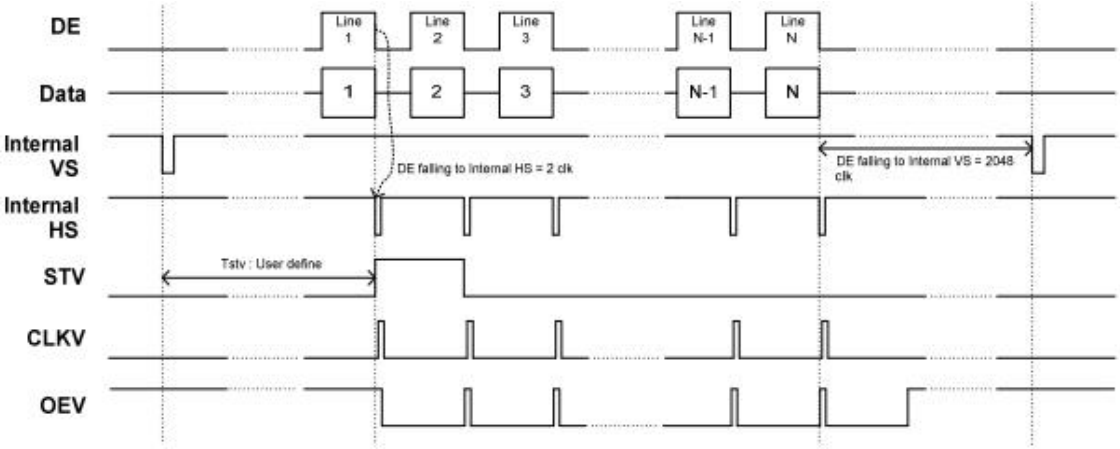

6.7 Reset Timing Chart

The RESET input must be held at least 1ms after power is stable

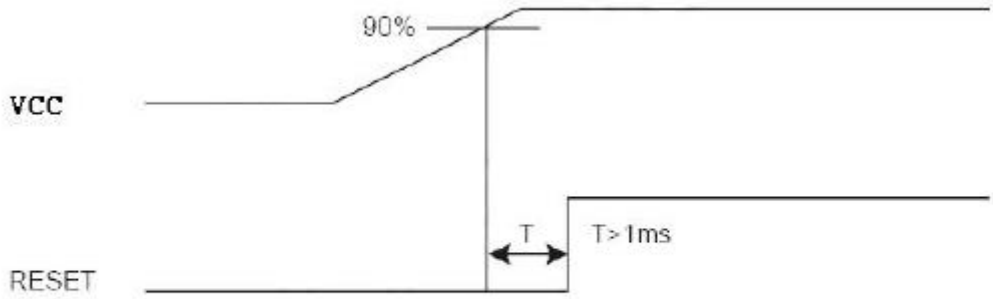

Reset timing

7 Optical Characteristics

Items		Symbol	Condition	Min.	Typ.	Max.	Unit	Remark
Viewing angles		θ_T	Center CR≥10		85	-	Degree.	Note2
		θ_B			85	-		
		θ_L			85	-		
		θ_R			85	-		
Contrast Ratio		CR	Θ =0	-	800	-	-	Note1, Note3
Response Time		T_{ON}	25°C	-	20	35	ms	Note1, Note4
		T_{OFF}		-	25	40		
Chromaticity	White	X_W	Backlight is on	0.282	0.312	0.342	-	Note1, Note5
		Y_W		0.319	0.349	0.379	-	
	Red	X_R		0.609	0.639	0.669	-	
		Y_R		0.314	0.344	0.374	-	
	Green	X_G		0.264	0.294	0.324	-	
		Y_G		0.557	0.587	0.617	-	
	Blue	X_B		0.102	0.132	0.162	-	
		Y_B		0.106	0.136	0.166	-	
Uniformity		U		80	-	-	%	Note1, Note6
NTSC					50		%	Note5
Luminance		L			1000			Note1, Note7

Test Conditions:
1. IF= 20mA(one channel),the ambient temperature is 25°C.
2. The test systems refer to Note 1 and Note 2.

Note 1: Definition of optical measurement system.
The optical characteristics should be measured in dark room. After 5 minutes operation, the optical Properties are measured at the center point of the LCD screen. All input terminals LCD panel must be ground when measuring the center area of the panel.

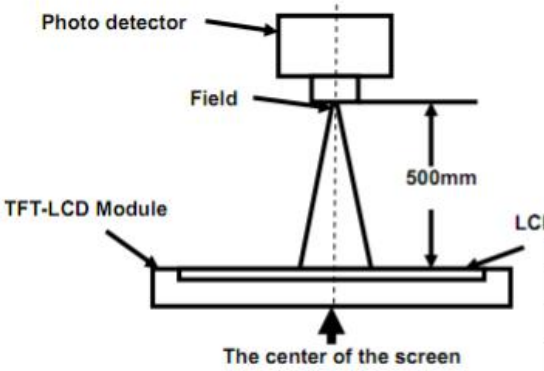

Item	Photo detector	Field
Contrast Ratio	BM-7A	1°
Luminance		
Chromaticity		
Lum Uniformity		
Response Time	SR-3A	2°

Note 2: Definition of viewing angle range and measurement system.
Viewing angle is measured at the center point of the LCD by CONOSCOPE (ergo-80).

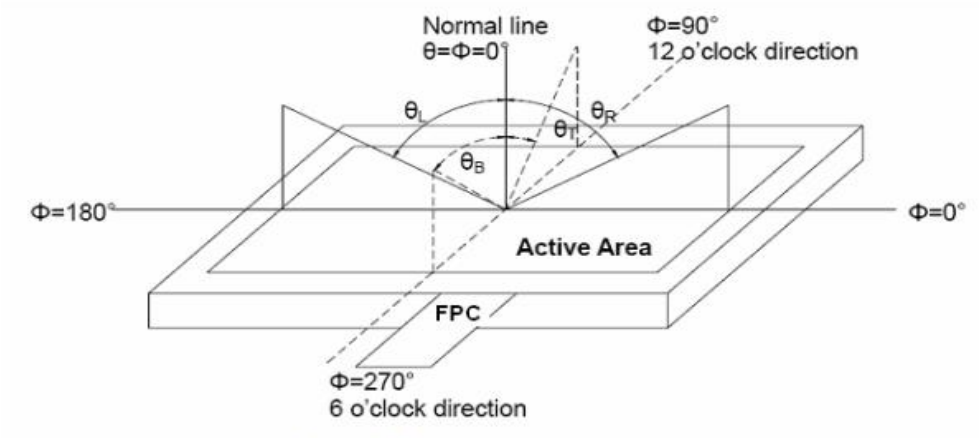

Fig. 1 Definition of viewing angle

Note 3: Definition of contrast ratio

$$\text{Contrast ratio (CR)} = \frac{\text{Luminance measured when LCD is on the "White" state}}{\text{Luminance measured when LCD is on the "Black" state}}$$

Note 4: Definition of Response time

The response time is defined as the LCD optical switching time interval Between “White” state and “Black” state. Rise time (TON) is the time between Photo detector output intensity changed from 90% to 10%. And fall time (TOFF) is The time between photo detector output intensity changed from 10% to 90%

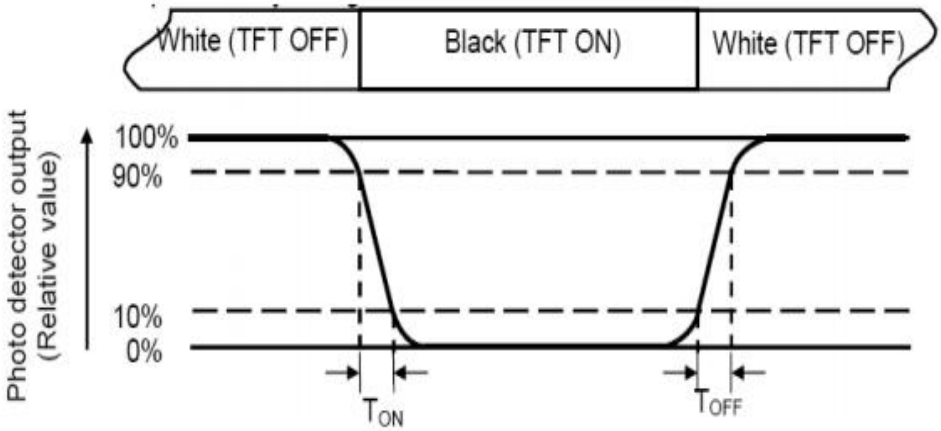

Note 5: Definition of color chromaticity (CIE1931)
Color coordinates measured at center point of LCD.
Note 6: Definition of Luminance Uniformity
Active area is divided into 9 measuring areas (Refer Fig. 2). Every measuring point is placed at the Center of each measuring area
Luminance Uniformity (U) = Lmin/ Lmax X100%
L-------Active area length W----- Active area width

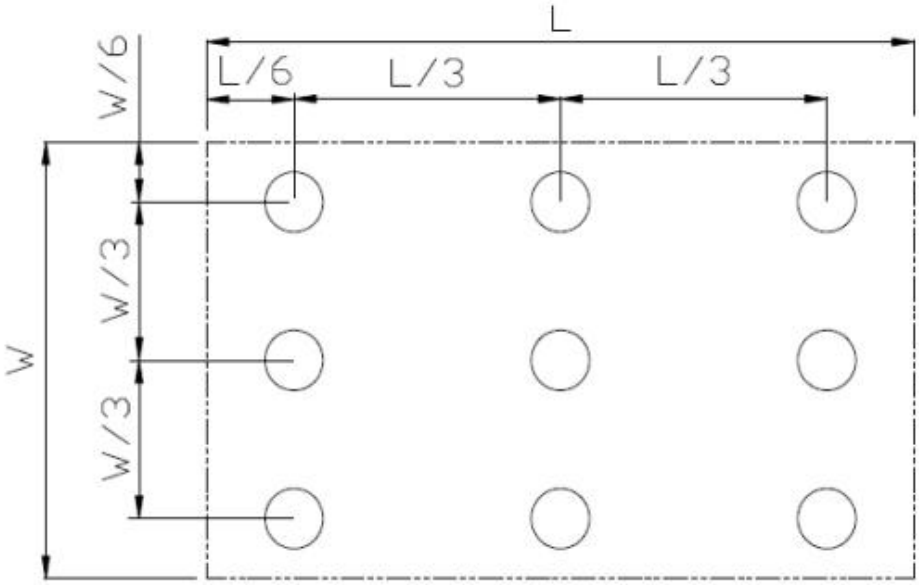

Fig. 2 Definition of uniformity
Lmax: The measured maximum luminance of all measurement position.
Lmin: The measured minimum luminance of all measurement position.
Note 7: Definition of Luminance:

Measure the luminance of white state at center point.

8 Environmental / Reliability Tests

No	Test Item	Condition	Remarks
1	High Temperature Operation	Ts= +70℃, 96hrs	Note 1 IEC60068-2-2, GB2423. 2-89
2	Low Temperature Operation	Ta= -20℃, 96hrs	Note 2 IEC60068-2-1 GB2423.1-89
3	High Temperature Storage	Ta= +80℃, 96hrs	IEC60068-2-2 GB2423. 2-89
4	Low Temperature Storage	Ta= -30℃, 96hrs	IEC60068-2-1 GB/T2423.1-89
5	High Temperature & Humidity Storage	Ta= +60℃, 90% RH max, 72 hours	IEC60068-2-3 GB/T2423.3-2006
6	Thermal Shock (Non-operation)	-30℃ 30 min ~ +80℃ 30 min Change time: 5min, 20 Cycle	Start with cold temperature, end with high temperature IEC60068-2-14, GB2423.22-87
7	Electro Static Discharge (Operation)	C=150pF, R=330 Ω, 5 points/panel Air:±8KV, 5 times; Contact: ±4KV, 5 times; (Environment: 15℃ ~ 35℃, 30% ~ 60%, 86Kpa ~ 106Kpa)	IEC61000-4-2 GB/T17626.2-1998
8	Vibration (Non-operation)	Frequency range: 10~55Hz, Stroke: 1.mm Sweep: 10Hz~55Hz~10Hz 2 hours for each direction of X .Y. Z. (package condition)	IEC60068-2-6 GB/T2423.5-1995
9	Shock (Non-operation)	60G 6ms, ± X, ±Y , ± Z 3 times for each direction	IEC60068-2-27 GB/T2423.5-1995
10	Package Drop Test	Height: 60 cm, 1 corner, 3 edges, 6 surfaces	IEC60068-2-32 GB/T2423.8-1995

Note: 1. T_S is the temperature of panel's surface.
2. Ta is the ambient temperature of sample.

9 Mechanical Drawing

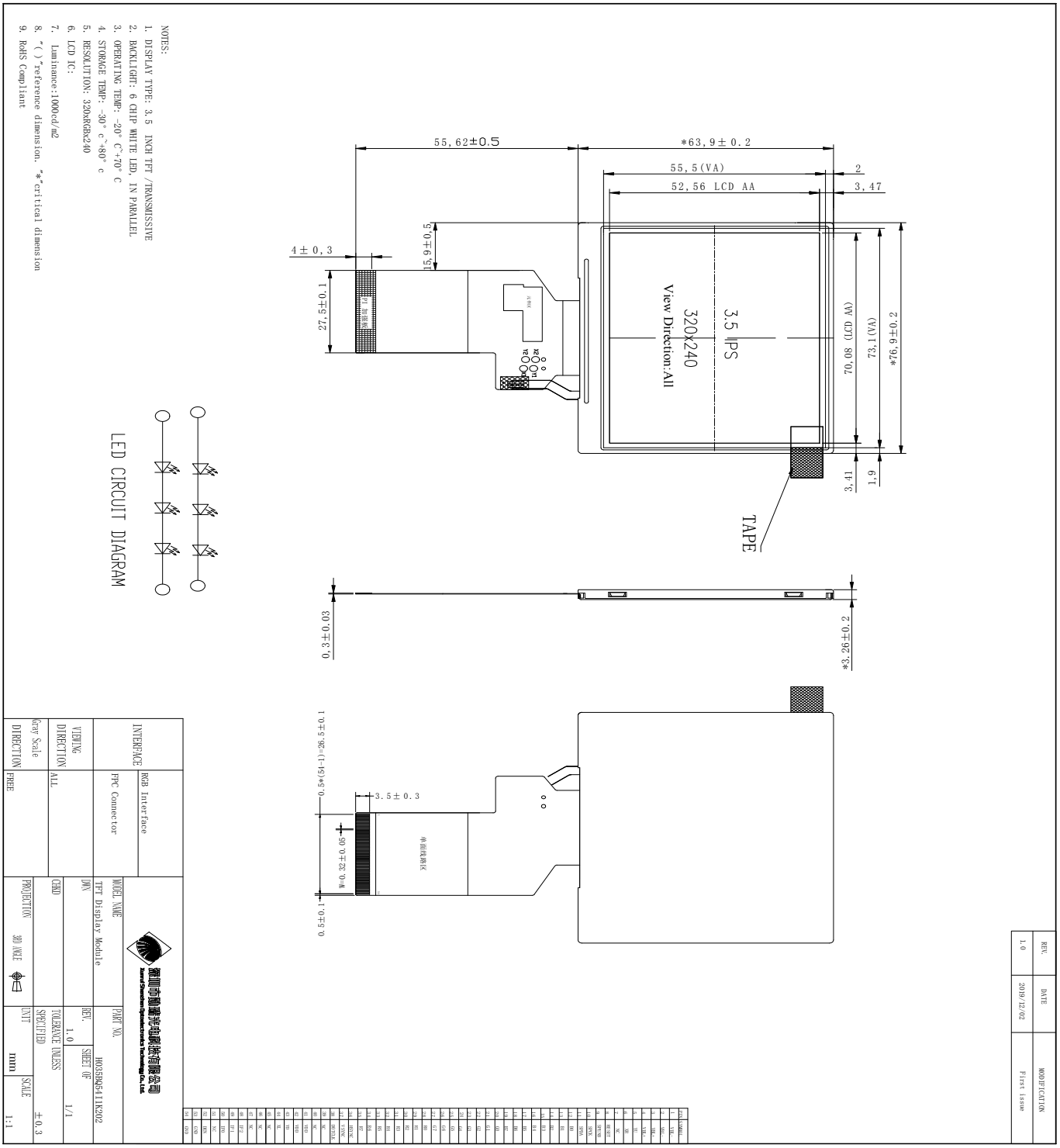

1 0.Packing

Packing Method

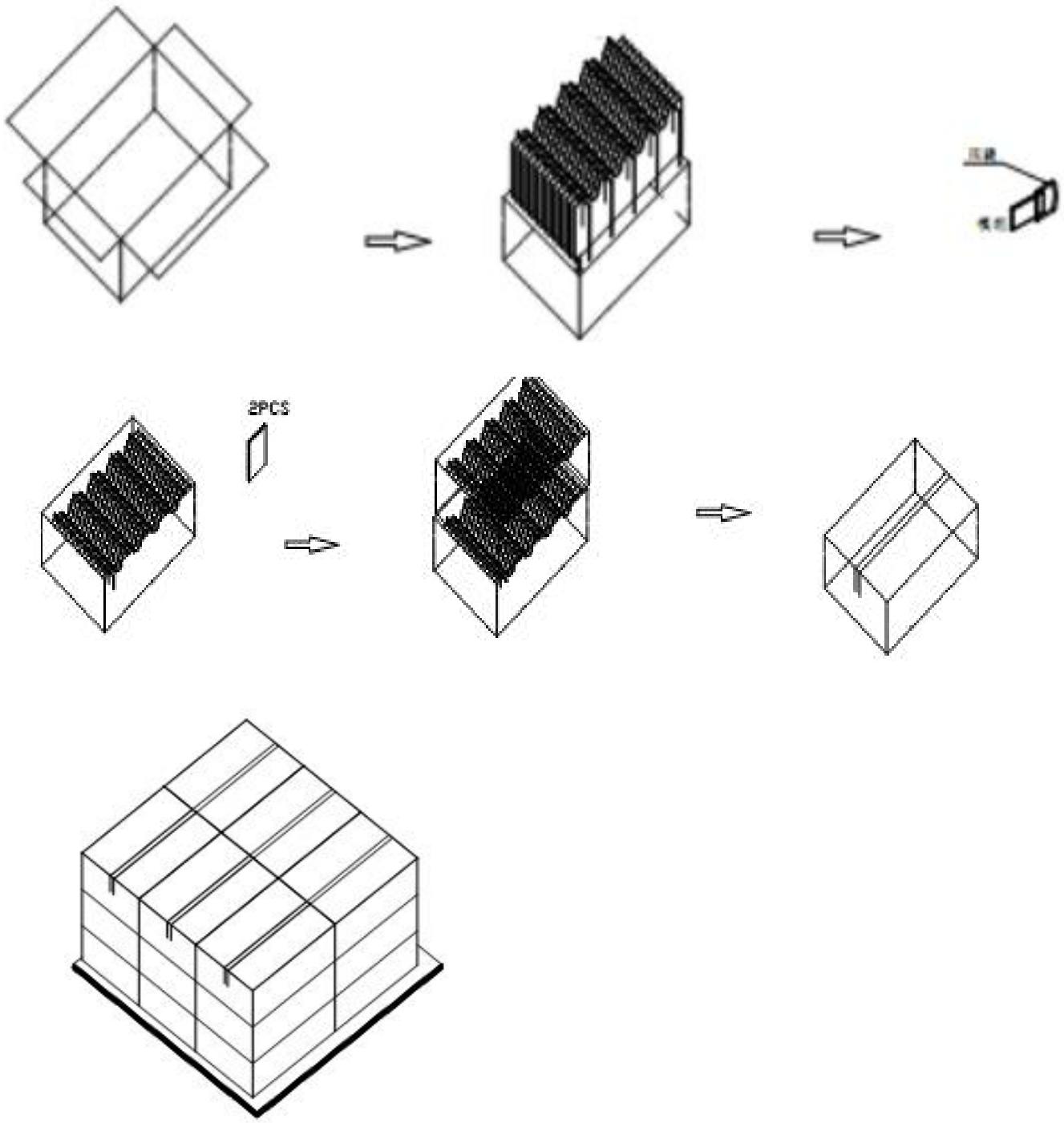

11. Precautions for Use of LCD modules

11.1 Handling Precautions

11.1.1. The display panel is made of glass. Do not subject it to a mechanical shock by dropping it from a high place, etc.

11.1.2. If the display panel is damaged and the liquid crystal substance inside it leaks out, be sure not to get any in your mouth, if the substance comes into contact with your skin or clothes, promptly wash it off using soap and water.

11.1.3. Do not apply excessive force to the display surface or the adjoining areas since this may cause the color tone to vary.

11.1.4. The polarizer covering the display surface of the LCD module is soft and easily scratched. Handle this polarizer carefully.

11.1.5. If the display surface is contaminated, breathe on the surface and gently wipe it with a soft dry cloth. If still not completely clear, moisten cloth with one of the following solvents:

- Isopropyl alcohol
- Ethyl alcohol

Solvents other than those mentioned above may damage the polarizer. Especially, do not use the following:
Water ； Ketene ； Aromatic solvents

11.1.6. Do not attempt to disassemble the LCD Module.

11.1.7. If the logic circuit power is off, do not apply the input signals.

11.1.8. To prevent destruction of the elements by static electricity, be careful to maintain an optimum work environment.

11.1.8.1. Be sure to ground the body when handling the LCD Modules.

11.1.8.2. Tools required for assembly, such as soldering irons, must be properly ground.

11.1.8.3. To reduce the amount of static electricity generated, do not conduct assembly and other work under dry conditions.

11.1.8.4. The LCD Module is coated with a film to protect the display surface. Be care when peeling off this protective film since static electricity may be generated.

11.2 Storage Precautions

11.2.1. When storing the LCD modules, avoid exposure to direct sunlight or to the light of fluorescent lamps.

11.2.2. The LCD modules should be stored under the storage temperature range If the LCD modules will be stored for a long time, the recommend condition is:

Temperature : 0℃ ～ 40℃ Relatively humidity: ≤80%

11.2.3. The LCD modules should be stored in the room without acid, alkali and harmful gas.

11.3 Transportation Precautions

The LCD modules should be no falling and violent shocking during transportation, and also should avoid excessive press, water, damp and sunshine.