APPROVAL SHEET 承认书

客户名称 Customer	
产品型号 Part NO.	**HBM156FH10B**
产品内容 Product type	Mode: TFT LCD Module
备注栏 Remarks	☐APPROVAL FOR SEPCIFICATIONS ONLY ■APPROVAL FOR SEPCIFICATIONS AND SAMPLE
客户确认签章 Signature by Customer:	
备注/ Notes:	

PREPARED BY	CHECKED BY	APPROVED BY

RECORDS OF REVISION

DATE	NO	REVISED No.	PAGE	SUMMARY	NOTE
2021-8-06		Rev01	22	-	

1. Application

This specification applies to a color TFT-LCM Module,

2. Overview

This TFT-LCM Module is a color active matrix TFT LCD using amorphous silicon TFT's (Thin Film Transistors) as an active switching devices. This FOB has a 15.6 inch diagonally measured active area with FHD resolutions (1920 horizontal by 1080vertical pixel array). Each pixel is divided into RED, GREEN, BLUE dots which are arranged in vertical Stripe and this LCM can display 16.7Mcolors. The TFT-LCD panel used for this FOB is a low reflection and higher color type . All input signals are eDP1.2 interface compatible.

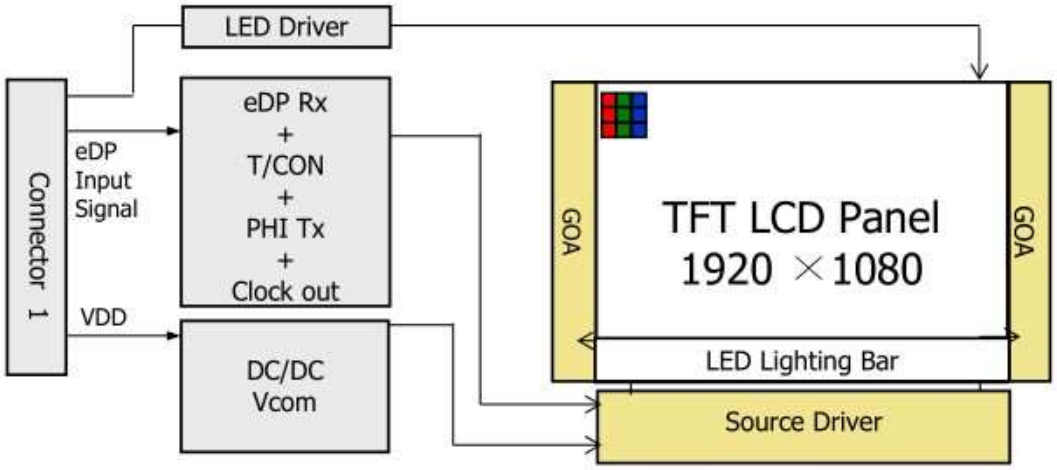

- 2 lane eDP Interface with 2.7Gbps Link Rates
- Thin and light weight
- 8-bit color depth, display 16.7M colors
- Single LED Lighting Bar. (Down side/Horizontal Direction)
- Green Product (RoHS & Halogen free product)
- On board LED Driving circuit
- Low driving voltage and low power consumption
- On board EDID chip

3. Mechanical specifications.

Parameter	Specification	Unit	Note
Display size	15.6” (Diagonal)	inch	
Active area	344.16(H) ×193.59(V)	mm	
Pixel Format	1920(H) ×1080(V) （1pixel = R + G + B dot）	pixel	
Pixel pitch	0.17925(H) x 0.17925 (V)	mm	
Pixel configuration	R, G, B vertical stripe		
Display mode	Normally black		
Display colors	16.7M	colors	
Power Consumption	0.7	W	
Surface treatment of front polarizer	Anti-glare coating: (3H)		

Outline dimensions

Parameter		Min	Typ	Max	Unit	Remark
Unit outline dimensions	Width	359.24	359.54	359.84	mm	
	Height	206.24	206.54	206.84	mm	
	Depth	3.45	3.65	3.85	mm	w/o PWB.[Note3-2]
Mass		-	-	-	g	

4. Input Terminals

4-1 Driving interface of PWB

The electronics interface connector is UJU IS050-L30B-C10 or Compatible.
The connector interface pin assignments are listed in Table 6.

<Table 6. Pin Assignments for the Interface Connector>

Pin No.	Symbol	I/O	Function	Remark
1	NC	I	NC	
2	H_GND	P	High Speed round	
3	Lane1_N	I	Complement Signal Link Lane 1	
4	Lane1_P	I	True Signal Link Lane 1	
5	H_GND	P	High Speed round	
6	Lane0_N	I	Complement Signal Link Lane 0	
7	Lane0_P	I	True Signal Link Lane 0	
8	H_GND	P	High Speed round	
9	AUX_CH_P	I	True Signal Auxiliary Channel	
10	AUX_CH_N	I	Complement Signal Auxiliary Channel	
11	H_GND	P	High Speed round	
12	LCD_VDD	P	LCD logic and driver power(3.3V)	
13	LCD_VDD	P	LCD logic and driver power(3.3V)	
14	NC	I	NC	
15	LCD_GND	P	LCD logic and driver ground	
16	LCD_GND	P	LCD logic and driver ground	
17	HPD	O	HPD signal pin	
18	LED-1	P	Backlight ground	

19	LED-2	P	Backlight ground	
20	LED-3	P	Backlight ground	
21	LED-4	P	Backlight ground	
22	BL_ENABLE	I	Backlight on/off	
23	BL_PWM_DIM	I	System PWM	
24	NC	-	Reserved for LCD manufacturer's use	
25	NC	-	Reserved for LCD manufacturer's use	
26	BL_PWR	P	LED Power Supply 5V-21V；If not use，NC	
27	BL_PWR	P	LED Power Supply 5V-21V；If not use，NC	
28	BL_PWR	P	LED Power Supply 5V-21V；If not use，NC	
29	BL_PWR	P	LED Power Supply 5V-21V；If not use，NC	
30	NC		Color Engin Function Reserved	

*1 P: POWER I: Input O: Output

The electronics interface connector is UJU IS050-L30B-C10 or Compatible. Mating housing/ Part Number：I-PEX 20454-030T or Compatible The connector interface pin assignments are listed in Table 6.

CN1 pin 1 position

4-2 eDP interface

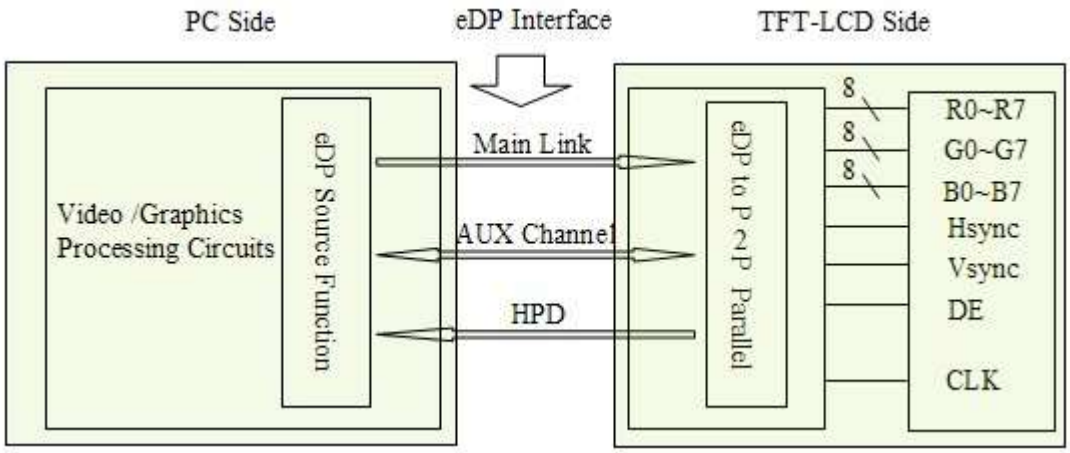

Lane 0	Lane 1
R0-7:0	R1-7:0
G0-7:0	G1-7:0
B0-7:0	B1-7:0
R2-7:0	R3-7:0
G2-7:0	G3-7:0
B2-7:0	B3-7:0
R4-7:0	R5-7:0
G4-7:0	G5-7:0
B4-7:0	B5-7:0

Fig.4-2-4 eDP 2lane 6bit input data mapping

5. Electrical Characteristics 5-1 Absolute Maximum Ratings

Parameter	Symbol	Condition	Ratings		Unit	Remark
			MIN	MAX		
+3.3V supply voltage	VDD	Ta=25℃	-0.3	+4.0	V	
Backlight supply voltage	V_{BL}	Ta=25℃	-0.3	+26.5	V	
Input voltage(eDP)	VI	Ta=25℃	-0.3	+1.5	V	[Note 5-1]
Input voltage(BL)	V_{BL}_I	Ta=25℃	-0.3	VDD+0.3	V	[Note 5-2]
Storage temperature	Tstg		-10	+60	℃	[Note 5-3]
Operation temperature	Topa		-0	+50	℃	

(*) “Absolute Maximum Ratings” is regulations that do not exceed it even momentarily.

(*) Stress beyond those listed under “Absolute Maximum Ratings” may cause permanent damage to the device.

[Note 5-1] eDP signals

[Note 5-2]Backlight control signals (BL_ENABLE,BL_PWM_DIM)

[Note 5-3] Humidity: 90%RH Max.at Ta≦+40℃.

Maximum wet-bulb temperature at +39℃ or less at Ta>+40℃, No condensation.

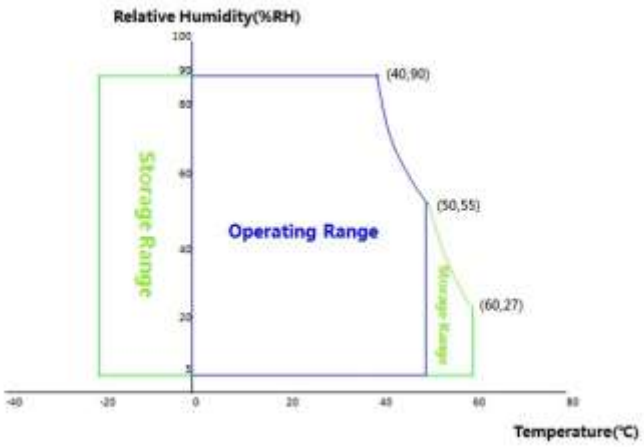

5-2 Electrical Specifications

< Electrical specifications > Ta=25+/-2°C

Parameter		Min.	Typ.	Max.	Unit	Remarks
Power Supply Voltage	V_{DD}	3.0	3.3	3.6	V	Note 1
Permissible Input Ripple Voltage	V_{RF}	-	-	100	mV	At V_{DD} = 3.3V
Power Supply Current	I_{DD}	-		-	mA	Note 1
Differential Input Voltage	V_{ID}	200	-	600	mV	
Power Consumption	P_D	-	**0.85**	**1.6**	W	Note 1
	P_{BL}	-	-	**3.29**	W	Note 2
	P_{total}	-	-	TBD	W	

Notes : 1. The supply voltage is measured and specified at the interface connector of LCM.
The current draw and power consumption specified is for 3.3V at 25℃.
a) Typ : Mosaic Pattern
b) Max : RGB Pattern

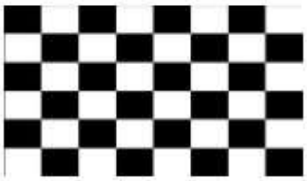

a) Mosaic Pattern

2. Calculated value for reference (V_{LED} × I_{LED})

5.3. DC Characteristics

5-3-1. TFT-LCD panel driving The specification of the eDP Rx interface timing parameter is shown in Table 8. <eDP Rx Interface Timing Specification>

Item	Symbol	Min	Typ	Max	Unit	Remark
Spread spectrum clock	SSC		0.5		%	
Differential peak-to-peak input voltage at package pins	$V_{RX-DIFFp-p}$	120	0	1200	mV	
Rx input DC common mode voltage	$V_{RX_DC_CM}$	-	GND	-	V	
Differential termination resistance	$R_{RX-DIFF}$	80	100	120	Ω	
Single-ended termination resistance	R_{RX-SE}	45	50	60	Ω	
Rx short circuit current limit	I_{RX_SHORT}	-	-	50	mA	
Intra-pair skew at Rx package pins (HBR) RX intra-pair skew tolerance at HBR	$L_{RX_SKEW_INTRA_PAIR}$	-	-	60	ps	

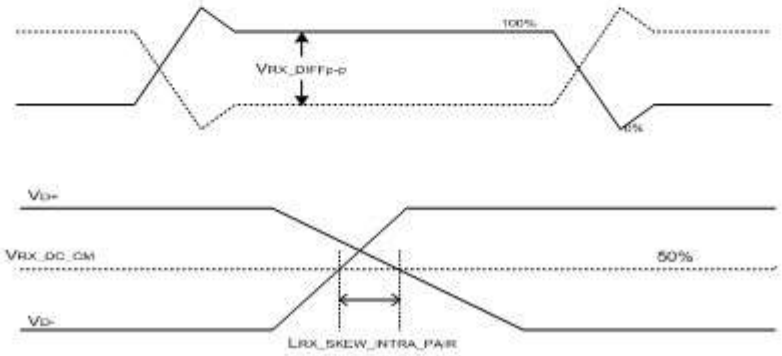

5-3-2. POWER SEQUENCE

To prevent a latch-up or DC operation of the LCD module, the power on/off sequence shall be as shown in below

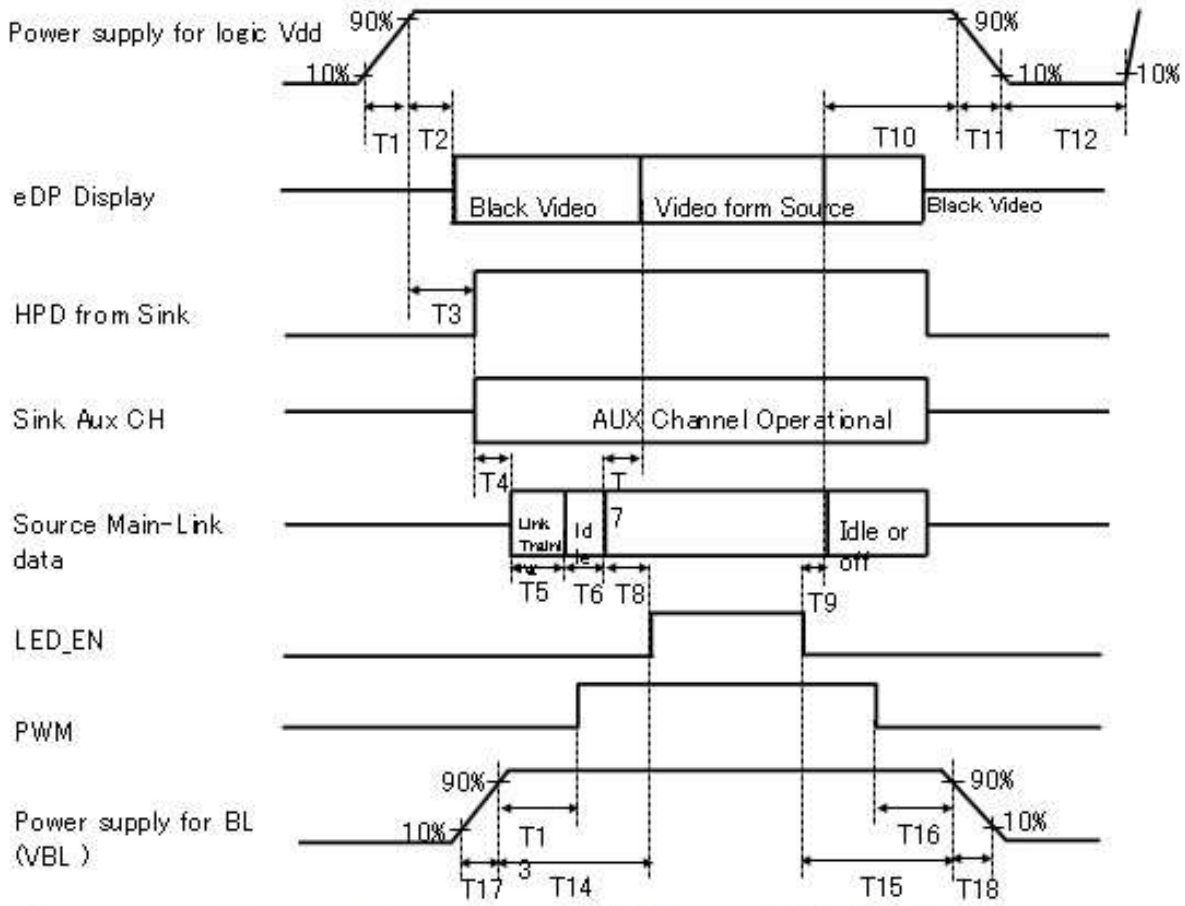

- 0.5ms ≤ T1 ≤ 10 ms
- 0ms ≤ T2 ≤ 200 ms
- 0ms ≤ T3 ≤ 200 ms
- 0ms ≤ T13
- 0ms ≤ T14
- 0ms ≤ T17
- T3+T4+T5+T6+T8>T2(max)=200ms
- 0ms ≤ T7 ≤ 50ms
- 0ms ≤ T10 ≤ 500 ms
- 0 ms ≤ T11 ≤ 10 ms
- 150ms ≤ T12
- 0ms ≤ T15
- 0ms ≤ T16
- 0ms ≤ T18

Notes:

1. When the power supply VDD is 0V, keep the level of input signals on the low or keep high impedance.
2. Backlight sequence is reference.

6 . Backlight driving

The backlight system is an edge-lighting type with white-LED.
(It is usually required to measure under the following condition: Ta=25℃±2℃)

Parameter	Symbol	Min.	Typ.	Max.	Unit	Remark
Supply voltage	V_{BL}	6.0	12.0	21.0	V	
Current dissipation	I_{BL}	-	300	-	mA	V_{BL}=12V Duty Ratio=100%
EN Control Level	Backlight on	1.6	-	5	V	[Note6-3-3]
	Backlight off	0	-	1	V	
PWM Control	V_{PWM} H	1.3	-	5	V	

Level	V_{PWM} L	0	-	0.15	V	
Brightness Control Duty Ratio	Duty	1	-	100	%	[Note6-3-1]
Brightness Control frequency	f_{PWM}	100	-	20,000	Hz	
LED lifetime	-	-	30,000	-	h	LED

Notes : 1. Power supply voltage12V for LED Driver
Calculator Value for reference I F × V F ×40 / efficiency = P LED
2. The LED Life-time define as the estimated time to 50% degradation of initial luminous.
3. 1% duty cycle is achievable with a dimming frequency less than 1KHz.

LED structure

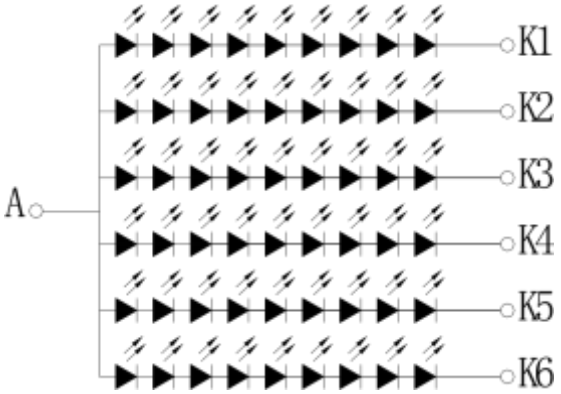

Backlight LED 9 串 6 并 54 颗 Circuit

7. Timing characteristics of input signals

7-1.Timing Characteristics

The TFT-LCM Module is operated by the DE only.

Item		Symbols	Min	Typ	Max	Unit
Clock	Frequency	1/Tc	136.65	147.84	155	MHz
	High Time	Tch	-	4/7	-	Tc
	Low Time	Tcl	-	3/7	-	Tc
Frame Period		Tv	1095	1120	1130	lines
			-	60	-	Hz
			-	16.7	-	ms
Vertical Display Period		Tvd	-	1080	-	lines
One line Scanning Period		Th	2080	2200	2248	clocks
Horizontal Display Period		Thd	-	1920	-	clocks

7-2. Input data signals and display position on the screen

Display position of input data(V·H)

7-3 Input sigal,basic display colors and gray scale of each color

	Colors & Gray Scale	Gray Scale	Data signal																							
			R0	R1	R2	R3	R4	R5	R6	R7	G0	G1	G2	G3	G4	G5	G6	G7	B0	B1	B2	B3	B4	B5	B6	B7
			LSB							MSB	LSB							MSB	LSB							MSB
Basic Color	Black	–	0	0	0	0	0	0	0	0	0	0	0	0	0	0	0	0	0	0	0	0	0	0	0	0
	Blue	–	0	0	0	0	0	0	0	0	0	0	0	0	0	0	0	0	1	1	1	1	1	1	1	1
	Green	–	0	0	0	0	0	0	0	0	1	1	1	1	1	1	1	1	0	0	0	0	0	0	0	0
	Cyan	–	0	0	0	0	0	0	0	0	1	1	1	1	1	1	1	1	1	1	1	1	1	1	1	1
	Red	–	1	1	1	1	1	1	1	1	0	0	0	0	0	0	0	0	0	0	0	0	0	0	0	0
	Magenta	–	1	1	1	1	1	1	1	1	0	0	0	0	0	0	0	0	1	1	1	1	1	1	1	1
	Yellow	–	1	1	1	1	1	1	1	1	1	1	1	1	1	1	1	1	0	0	0	0	0	0	0	0
	White	–	1	1	1	1	1	1	1	1	1	1	1	1	1	1	1	1	1	1	1	1	1	1	1	1
Gray Scale of Red	Black	GS0	0	0	0	0	0	0	0	0	0	0	0	0	0	0	0	0	0	0	0	0	0	0	0	0
	⇧	GS1	1	0	0	0	0	0	0	0	0	0	0	0	0	0	0	0	0	0	0	0	0	0	0	0
	Darker	GS2	0	1	0	0	0	0	0	0	0	0	0	0	0	0	0	0	0	0	0	0	0	0	0	0
	⇧	↓	↓								↓								↓							
	⇩	↓	↓								↓								↓							
	Brighter	GS253	1	0	1	1	1	1	1	1	0	0	0	0	0	0	0	0	0	0	0	0	0	0	0	0
	⇩	GS254	0	1	1	1	1	1	1	1	0	0	0	0	0	0	0	0	0	0	0	0	0	0	0	0
	Red	GS255	1	1	1	1	1	1	1	1	0	0	0	0	0	0	0	0	0	0	0	0	0	0	0	0
Gray Scale of Green	Black	GS0	0	0	0	0	0	0	0	0	0	0	0	0	0	0	0	0	0	0	0	0	0	0	0	0
	⇧	GS1	0	0	0	0	0	0	0	0	1	0	0	0	0	0	0	0	0	0	0	0	0	0	0	0
	Darker	GS2	0	0	0	0	0	0	0	0	0	1	0	0	0	0	0	0	0	0	0	0	0	0	0	0
	⇧	↓	↓								↓								↓							
	⇩	↓	↓								↓								↓							
	Brighter	GS253	0	0	0	0	0	0	0	0	1	0	1	1	1	1	1	1	0	0	0	0	0	0	0	0
	⇩	GS254	0	0	0	0	0	0	0	0	0	1	1	1	1	1	1	1	0	0	0	0	0	0	0	0
	Green	GS255	0	0	0	0	0	0	0	0	1	1	1	1	1	1	1	1	0	0	0	0	0	0	0	0
Gray Scale of Blue	Black	GS0	0	0	0	0	0	0	0	0	0	0	0	0	0	0	0	0	0	0	0	0	0	0	0	0
	⇧	GS1	0	0	0	0	0	0	0	0	0	0	0	0	0	0	0	0	1	0	0	0	0	0	0	0
	Darker	GS2	0	0	0	0	0	0	0	0	0	0	0	0	0	0	0	0	0	1	0	0	0	0	0	0
	⇧	↓	↓								↓								↓							
	⇩	↓	↓								↓								↓							
	Brighter	GS253	0	0	0	0	0	0	0	0	0	0	0	0	0	0	0	0	1	0	1	1	1	1	1	1
	⇩	GS254	0	0	0	0	0	0	0	0	0	0	0	0	0	0	0	0	0	1	1	1	1	1	1	1
	Blue	GS255	0	0	0	0	0	0	0	0	0	0	0	0	0	0	0	0	1	1	1	1	1	1	1	1

0: Low level voltage, 1: High level voltage.

Each basic color can be displayed in 256 gray scales from 8 bit data signals.
According to the combination of 24 bit data signals, the 16.7M color display can be achieved on the screen.

8. EDID Specifications (TBD)

00	Header	00	0	0	EDID Header
01		FF	255	255	
02		FF	255	255	
03		FF	255	255	
04		FF	255	255	
05		FF	255	255	
06		FF	255	255	
07		00	0	0	
08	ID Manufacturer Name	09	9	BOE	ID = BOE
09		E5	229		
0A	ID Product Code	55	85	2133	ID = 2133
0B		08	8		
0C	32-bit serial No.	00	0	0	
0D		00	0	0	
0E		00	0	0	
0F		00	0	0	
10	Week of manufacture	33	51	51	
11	Year of Manufacture	1C	28	2018	Manufactured in 2018
12	EDID Structure Ver.	01	1	1	EDID Ver 1.0
13	EDID revision #	04	4	4	EDID Rev. 0.4
14	Video input definition	A5	165	-	Video Signal Interface
15	Max H image size	1F	31	31	31cm (Approx)
16	Max V image size	11	17	17	17cm (Approx)
17	Display Gamma	78	120	2.2	Gamma curve = 2.2
18	Feature support	02	2	-	Feature Support
19	Red/Green low bits	FF	255	-	Red / Green Low Bits
1A	Blue/White low bits	35	53	-	Blue / White Low Bits
1B	Red x high bits	A7	167	0.655	Red(x)= 10100111(0.655)
1C	Red y high bits	56	86	0.339	Red(y)= 01010110(0.339)
1D	Green x high bits	50	80	0.315	Green(x) = 01010000 0.315)
1E	Green y high bits	9F	159	0.624	Green(y) = 10011111 0.624)
1F	Blue x high bits	27	39	0.152	Blue(x) = 00100111(0.152)
20	BLue y high bits	0E	14	0.058	Blue(y) = 00001110(0.058)
21	White x high bits	50	80	0.313	White(x) =01010000(0.313)

22	White y high bits	54	84	0.329	White(y)= 01010100 (0.329)
23	Established timing 1	00	0	-	--
24	Established timing 2	00	0	-	
25	Established timing 3	00	0	-	
26	Standard timing #1	01	1		
27		01	1		
28	Standard timing #2	01	1		
29		01	1		
2A	Standard timing #3	01	1		
2B		01	1		
2C	Standard timing #4	01	1		
2D		01	1		
2E	Standard timing #5	01	1		
2F		01	1		
30	Standard timing #6	01	1		
31		01	1		
32	Standard timing #7	01	1		
33		01	1		
34	Standard timing #8	01	1		
35		01	1		
36	Detailed timing/monitor descriptor #1	C0	192	147.8	
37		39	57		
38		80	128	1920	
39		18	24	280	
3A		71	113	-	
3B		38	56	1080	

3C		28	40	40
3D		40	64	-
3E		30	48	48
3F		20	32	32
40		36	54	3
41		00	0	6
42		35	53	309
43		AE	174	174
44		10	16	-
45		00	0	0
46		00	0	0
47		1A	26	-
48	Detailed timing/monitor descriptor #2	00	0	0.0
49		00	0	
4A		00	0	0
4B		00	0	0
4C		00	0	-
4D		00	0	0
4E		00	0	0
4F		00	0	-
50		00	0	0
51		00	0	0
52		00	0	0
53		00	0	0
54		00	0	0

55		00	0	0
56		00	0	-
57		00	0	0
58		00	0	0
59		00	0	-
5A	Detailed timing/monitor descriptor #3	00	0	
5B		00	0	
5C		00	0	
5D		FE	254	
5E		00	0	
5F		42	66	B
60		4F	79	O
61		45	69	E
62		20	32	
63		43	67	C
64		51	81	Q
65		0A	10	
66		20	32	
67		20	32	
68		20	32	
69		20	32	
6A		20	32	
6B		20	32	
6C	Detailed timing/monitor descriptor #4	00	0	

6D		00	0	
6E		00	0	
6F		FE	254	
70		00	0	
7D		0A	10	
7E	Extension flag	00	0	1
7F	Checksum	86	134	-

Notes:

1. EDID custom information not required

9. OPTICAL SPECIFICATION

9.1 Overview

The test of Optical specifications shall be measured in a dark room (ambient luminance≤1 lux and temperature = 25±2℃) with the equipment of Luminance meter system (Goniometer system and PR730) and test unit shall be located at an approximate distance

50cm from the LCD surface at a viewing angle of θ and Φ equal to 0°， We refer to θØ=0(=θ3) as the 3 o'clock direction (the "right"), θØ=90 (= θ12) as the 12 o'clock direction("upward"), θØ=180 (= θ9) as the 9 o'clock direction ("left") andθØ=270(= θ6) as the 6 o'clock direction ("bottom"). While scanning θ and /or Ø, the center of the measuring spot on the Display surface shall stay fixed. The backlight should be operating for 30 minutes prior to measurement. VDD shall be 3.3+/- 0.3V at 25℃. Optimum viewing angle direction is 6 'clock.

9.2 ptical characteristics

Paramete	Conditions		Min.	Typ.	Max.	Unit	Note
Viewing Angle (CR>10)	Horizontal	θL	-	85	-	degree	
		θR	-	85	-		
	Vertical	θT	-	85	-		
		θB	-	85	-		
Contrast Ratio	Center			800	-	-	
Response Time	Tr+Td		-	30	35	ms	
CF Color Chromaticity (CIE1931)	Red x		Typ. - 0.05	0.585	Typ. +0.05	-	[Note 9-2,9-6] Normal operation (PWM Duty=100%)
	Red y			0.364		-	
	Green x			0.350		-	
	Green y			0.580		-	
	Blue x			0.163		-	
	Blue y			0.143		-	
	White x			(0.313)		-	
	White y			(0.329)		-	
NTSC ratio	%			(75)		-	

Center Luminance of white	Y_{LI}	**300**	**350**		cd/m	
Cross Talk	CT			2.0	**%**	

Notes :

1. Viewing angle is the angle at which the contrast ratio is greater than 10. The viewing angles aredetermined for the horizontal or 3, 9 o'clock direction and the vertical or 6, 12 o'clock direction with respect to the optical axis which is normal to the LCD surface (see FIGURE 1).
2. Contrast measurements shall be made at viewing angle of Θ= 0 and at the center of the LCD surface. Luminance shall be measured with all pixels in the view field set first to white, then to the dark (black) state .

(see FIGURE 1) Luminance Contrast Ratio (CR) is defined mathematically.

$$CR = \frac{\text{Luminance when displaying a white raster}}{\text{Luminance when displaying a black raster}}$$

3. Center Luminance of white is defined as luminance values of 5 point average across the LCD surface.Luminance shall be measured with all pixels in the view field set first to white. This measurement shall be taken at the locations shown in FIGURE 2 for a total of the measurements per display.
4. The White luminance uniformity on LCD surface is then expressed as : ΔY =Minimum Luminance of 5(or 13) points / Maximum Luminance of 5(or 13) points. (see FIGURE 2 and FIGURE 3).
5. The color chromaticity coordinates specified in Table 5 shall be calculated from the spectral datameasured with all pixels first in red, green, blue and white. Measurements shall be made at the center of the panel.
6. The electro-optical response time measurements shall be made as FIGURE 4 by switching the "data"input signal ON and OFF. The times needed for the luminance to change from 10% to 90% is Tr, and 90% to 10% is Td.
7. Cross-Talk of one area of the LCD surface by another shall be measured by comparing the luminance(YA) of a 25mm diameter area, with all display pixels set to a gray level, to the luminance (YB) of that same area when any adjacent area is driven dark

9.3 Optical measurements

Measurement Set Up

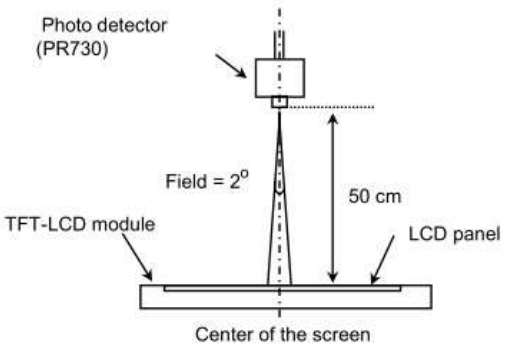

Optical characteristics measurement setup

Figure 2. White Luminance and Uniformity Measurement Locations (5 points)

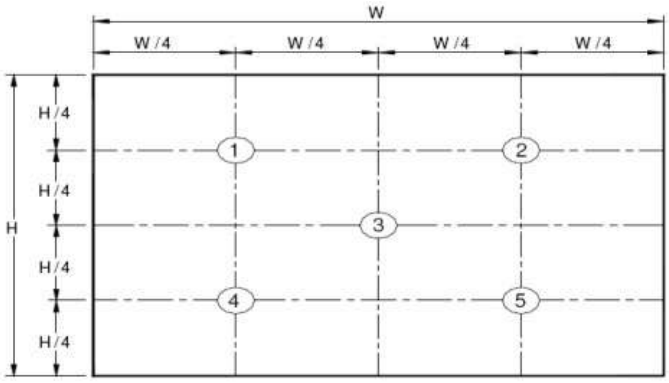

Center Luminance of white is defined as luminance values of center 5 points across the LCD surface. Luminance shall be measured with all pixels in the view field set first to white. This measurement shall be taken at the locations shown in FIGURE 2 for a total of the measurements per display.

Figure 3. Uniformity Measurement Locations (13 points)

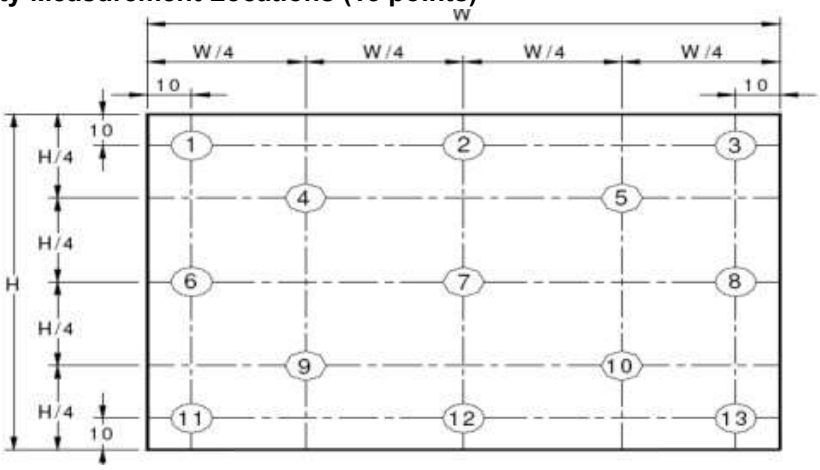

The White luminance uniformity on LCD surface is then expressed as : ΔY5 =Minimum Luminance of five points / Maximum Luminance of five points (see FIGURE 2) , ΔY13 = Minimum Luminance of 13 points /Maximum Luminance of 13 points (see FIGURE 3).

Figure 4. Response Time Testing

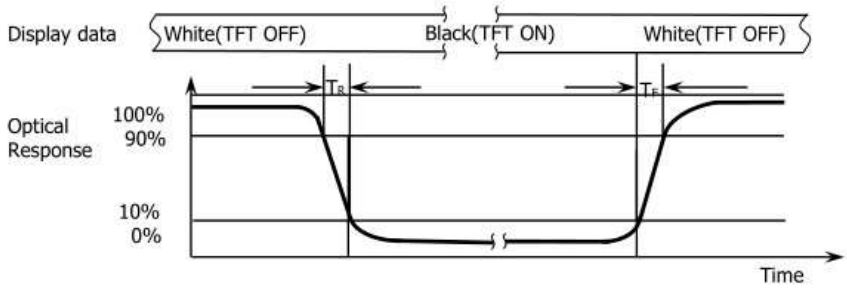

The electro-optical response time measurements shall be made as shown in FIGURE 4 by switching the “data” input signal ON and OFF. The times needed for the luminance to change from 10% to 90% is Td and 90% to 10% is Tr.

Figure 5. Cross Modulation Test Description

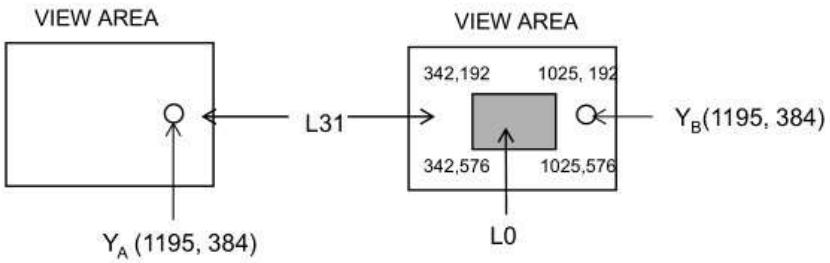

$$\text{Cross-Talk (\%)} = \left| \frac{Y_B - Y_A}{Y_A} \right| \times 100$$

Where:

Y A = Initial luminance of measured area (cd/m 2)

Y B = Subsequent luminance of measured area (cd/m 2)

The location measured will be exactly the same in both patterns

Cross-Talk of one area of the LCD surface by another shall be measured by comparing the luminance (YA) of a 25mm diameter area, with all display pixels set to a gray level, to the luminance (YB) of that same area when any adjacent area is driven dark (Refer to FIGURE 5).

10. Display Quality The display quality of the color TFT-LCD module shall be in compliance with the Incoming Inspection Standard.

11. Handling Precautions

a) Be sure to turn off the power supply when inserting or disconnecting the cable.
Please insert for too much stress not to join a connector in the case of insertion of a connector.

b) Be sure to design the cabinet so that the module can be installed without any extra stress such as warp or twist.

c) Since the front polarizer is easily damaged, pay attention not to scratch it.

d) Wipe off water drop immediately. Long contact with water may cause discoloration or spots.

e) When the panel surface is soiled, wipe it with absorbent cotton or other soft cloth.

f) Since the panel is made of glass, it may break or crack if dropped or bumped on hard surface. Handle with care.

g) Since CMOS LSI is used in this module, take care of static electricity and injure the human earth when handling. Observe all other precautionary requirements in handling components.

h) This module has its circuitry PCBs on the side and should be handled carefully in order not to be stressed.

i) Laminate film is attached to the module surface to prevent it from being scratched. Peel the laminate film off slowly just before the use with strict attention to electrostatic charges. Ionized air shall be blown over during the action. Blow off the 'dust' on the polarizer by using an ionized nitrogen gun, etc. Working under the following environments is desirable.

・All workers wear conductive shoes, conductive clothes, conductive fingerstalls and grounding belts without ail.

・Use Ionized blower for electrostatic removal, and peel of the laminate film with a constant speed. (Peeling of it at over 2 seconds)

j) The polarizer surface on the panel is treated with Anti-Glare. In case of attaching protective board over the LCD, be careful about the optical interface fringe etc. which degrades display quality.

k) Do not expose the LCD module to a direct sunlight, for a long period of time to protect the module from the ultra violet ray.

l) When handling LCD modules and assembling them into cabinets, please be noted that long-term storage in the environment of oxidization or deoxidization gas and the use of such materials as reagent, solvent, adhesive,resin, etc. which generate these gasses, may cause corrosion and discoloration of the LCD modules.

m) Liquid crystal contained in the panel may leak if the LCD is broken. Rinse it as soon as possible if it gets inside your eye or mouth by mistake.

n) Disassembling the module can cause permanent damage and should be strictly avoided.
Please don't remove the fixed tape, insulating tape etc that was pasted on the original module.

(Except for protection film of the panel.)

o) Be careful when using it for long time with fixed pattern display as it may cause afterimage. (Please use a screen saver etc., in order to avoid an afterimage.)

p) If a minute particle enters in the module and adheres to an optical material, it may cause display non-uniformity issue, etc. Therefore, fine-pitch filters have to be installed to cooling and inhalation hole if you intend to install a fan.

q) Epoxy resin (amine series curing agent), silicone adhesive material (dealcoholization series and oxime series), tray forming agent (azo compound) etc, in the cabinet or the packing materials may induce abnormal display with polarizer film deterioration regardless of contact or noncontact to polarizer film. Be sure to confirm the component of them.

r) Do not use polychloroprene. If you use it, there is some possibility of generating Cl2 gas that influences the reliability of the connection between LCD panel and driver IC.

s) Do not put a laminate film on LCD module, after peeling of the original one. If you put on it, it may cause discoloration or spots because of the occurrence of air gaps between the polarizer and the film.

t) Ground module bezel to stabilize against EMI and external noise.

12. Packaging Condition(TBD)

Piling number of cartons	
Package quantity in one carton	
Carton size	
Total mass of one carton filled with full modules	
Packing form	

13. Label (TBD)

1) Module Bar code label:
TBD
2) Packing bar code label
TBD

14. RoHS Directive

This LCD open-cell is compliant with RoHS Directive.

15. Reliability Test Items

No.	Test Item	Conditions
1	High temperature storage test	Ta=60℃ 72h
2	Low temperature storage test	Ta=-10℃ 72h
3	High temperature & high humidity operation test	Ta=40℃90%RH 72h (No condensation)
4	High temperature operation test	Ta=50℃ 72h
5	Low temperature operation test	Ta=0℃ 72h

[Result Evaluation Criteria] Under the display quality test condition with normal operation state.
Do not change these condition as such changes may affect practical display function.

[Normal operation state] temperature： +15~+35℃，Humidity：45~75%，Atmospheric pressure：86~106kPa

深圳市勋瑞光电科技有限公司
Xunrui photoelectric technology (shenzhen) CO.,LTD.

深圳市勋瑞光电科技有限公司 Xunrui photoelectric technology (shenzhen) CO.,LTD.	DESIGN: (设 计)	CHECKED: (检 查)	APPROVED: (批 准)	SPECIFICATION FOR BACKLIGHT 规 格			
				LCM CODE: (模组型号)	HBM156FH10B	EDITION: (版本号)	A
Date: (日期) 2021.08.06	Page: (页数) 1 OF 1	View: (视 角)		DRAW NO.: (出图编号)		EDITION: (版本号)	

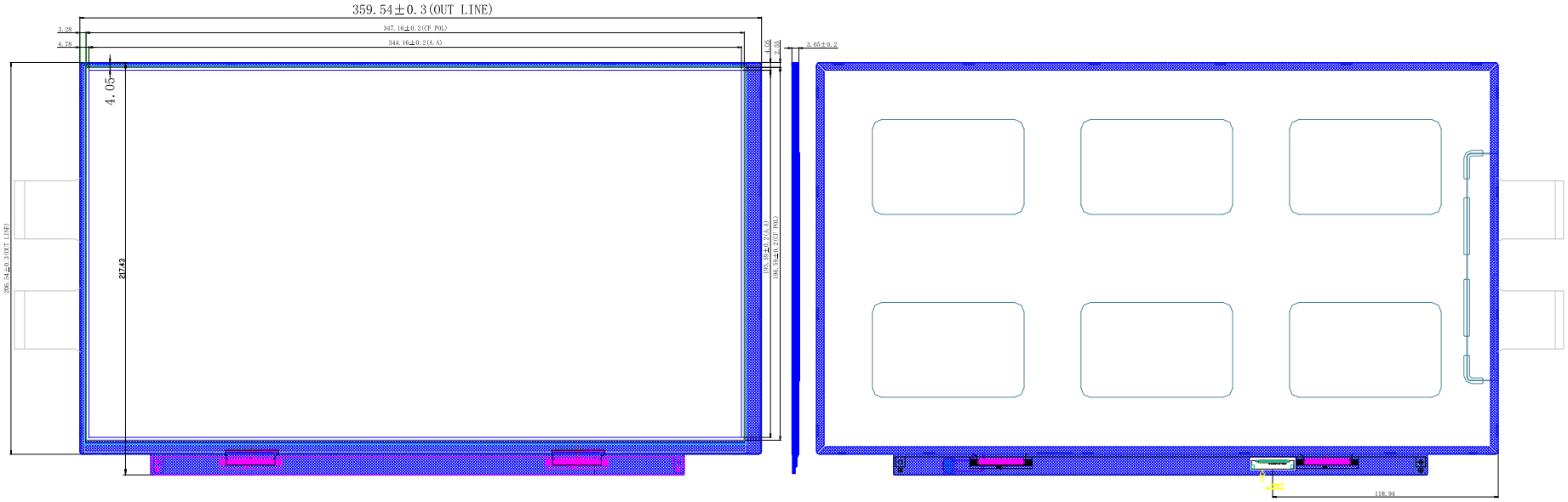

NOTES:

1. LED CIRCUIT DIAGRAM:

所使用的LED不带反向二极管

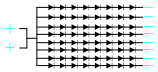

LED: 8*8=64 PCS

2. Do not scale drawing, Unit: mm.
3. ⚠ Modification rev. number.
4. Genral Tolerance: ±0.2, ( ) reference dimension. 带*的尺寸为重点管控尺寸
5. Draft angle 1.5°
6. Operating Temperature: -10~+50° C , Storage Temperature: -20~+60° C
7. possession materials are insulated (ex FPC, LED)
8. 同一片背光色度坐标x/y要求：最大值与最小值相差不超过0.02;
9. 平面度≤0.6.mm，变形方向为 , 。

REV(标记)	Date (日期)	Description (描述)
0	2021.08.06	首次发行

Electrical-Optical Characteristics (Ta=25° C):

Item		Symbol	min.	typ.	max.	Unit	Condition
Main screen	Luminance	Lv	300	350	---	cd/m²	If=20*8=160mA (恒定电流测试)
	Uniformity	Avg	75	80		%	
	Colour Coordinate	X	TBD	TBD	TBD		
		Y	TBD	TBD	TBD		
Forward Voltage		Vf	22.4	24	26.1	V	

•视角要求:

Customer Name: 客户名称		Check by: 确认		Approved by: 承认		Please Confirm This Drawing On/Before 请 签 回 此 图	