深圳市勋瑞光电科技有限公司
Xunrui photoelectric technology （shenzhen）CO,.LTD.

APPROVAL SHEET 承认书

客户名称 Customer	
产品型号 Part NO.	HBM116FH10C61
产品内容 Product type	Mode: TFT LCD Module
备注栏 Remarks	□APPROVAL FOR SEPCIFICATIONS ONLY ■APPROVAL FOR SEPCIFICATIONS AND SAMPLE
客户确认签章 Signature by Customer:	
备注/ Notes:	

PREPARED BY	CHECKED BY	APPROVED BY

RECORDS OF REVISION

DATE	NO	REVISED No.	PAGE	SUMMARY	NOTE
2021-11-14		Rev01	18	-	
2021-12-27		REV02	18	修改 CAD 图档	
2022—05-10		REV03	4,9	修改 PIN 定义及背光电源	

1. Application

This specification applies to a color TFT-LCD Module,

2. Overview

This Open-cell is a color active matrix LCD open-cell incorporating Oxide TFT (Thin Film Transistor).It is composed of a color TFT-LCD panel, driver ICs, a control circuit and power supply circuit. Graphics and texts can be displayed on a 1920×3×1080 dots panel with 16,777,216 colors by using eDP (Embedded Display Port) Ver1.2 interface and supplying +3.3V DC supply voltage for TFT-LCD panel driving.

In this TFT-LCD panel, color filters for excellent color performance is incorporated to realize brighter and clearer pictures, making this open-cell optimum for use in multi-media applications.

Optimum viewings are in all directions.

Without Backlight-driving LED controller.

eDP transfer rate specification: 2.7Gbps/2 lane.

3. Mechanical specifications.

Parameter	Specification	Unit	Note
Display size	11.6” (Diagonal)	inch	
Active area	256.32(H) ×144.18(V)	mm	
Pixel Format	1920(H) ×1080(V) （1pixel = R + G + B dot）	pixel	
Pixel pitch	0.1335(H) x 0.1335 (V)	mm	
Pixel configuration	R, G, B vertical stripe		
Display mode	Normally black		
Surface treatment of front polarizer	Anti-glare coating: (3H)		

Outline dimensions

Parameter		Min	Typ	Max	Unit	Remark
Unit outline dimensions	Width	263.4	263.4	263.6	mm	
	Height	157.02	157.22	157.42	mm	
	Depth	2.45	2.55	2.75	mm	w/o PWB.[Note3-2]
Mass		-	-	-	g	

[Note 3-1]Outline dimensions is shown in page 18

[Note 3-2]Without war page and deflection.

4. Input Terminals

4-1 Driving interface of PWB

CN1 (eDP signals, +3.3V DC power supply and B/L power supply)

Pin No.	Symbol	I/O	Function	Remark
1	CABC_EN / NC	-	Reserved for CD	[Note4-1-1]
2	H_GND	P	High Speed round	[Note4-1-2]
3	Lane1_N	I	Complement Signal Link Lane 1	
4	Lane1_P	I	True Signal Link Lane 1	
5	H_GND	P	High Speed round	[Note4-1-2]
6	Lane0_N	I	Complement Signal Link Lane 0	
7	Lane0_P	I	True Signal Link Lane 0	
8	H_GND	P	High Speed round	[Note4-1-2]
9	AUX_CH_P	I	True Signal Auxiliary Channel	
10	AUX_CH_N	I	Complement Signal Auxiliary Channel	
11	H_GND	P	High Speed round	[Note4-1-2]
12	LCD_VDD	P	LCD logic and driver power(3.3V)	
13	LCD_VDD	P	LCD logic and driver power(3.3V)	
14	NC	I	Reserved for LCD manufacturer's use	[Note4-1-1]
15	LCD_GND	P	LCD logic and driver ground	
16	LCD_GND	P	LCD logic and driver ground	
17	HPD	O	HPD signal pin	[Note4-1-3]
18	NC	I	NO CONNECT	
19	NC	I	NO CONNECT	
20	NC	I	NO CONNECT	
21	NC	I	NO CONNECT	
22	NC	I	NO CONNECT	
23	NC	I	NO CONNECT	
24	SCL/NC	-	Reserved for LCD manufacturer's use	[Note4-1-1]
25	SDA/NC	-	Reserved for LCD manufacturer's use	[Note4-1-1]
26	NC	I	NO CONNECT	
27	NC	I	NO CONNECT	
28	NC	I	NO CONNECT	
29	NC	I	NO CONNECT	
30	NC	-	Reserved for LCD manufacturer's use	[Note4-1-1]

*1 P: POWER I: Input O: Output

[Note 4-1-1] Don't input any signals or any powers into a NC pin. Keep the NC pin open.
[Note 4-1-2] The shielding case is connected with signal GND.

・Connector used :20455-030E-76(I-PEX)

・Corresponding connector : 20453-030T (I-PEX)

(Panda is not responsible to its product quality, if the user applies a connector not corresponding to the above model.)

The equivalent circuit figure of the terminal.

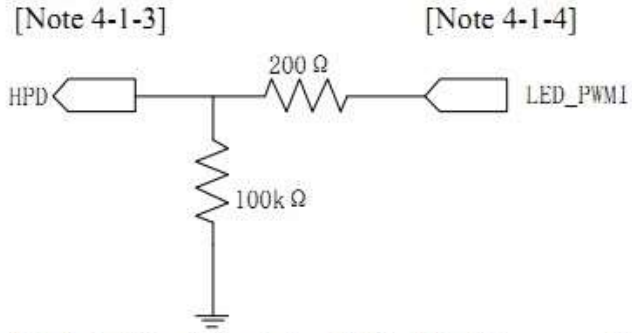

Fig.4-1-1 Equivalent circuit (Pin No.17)

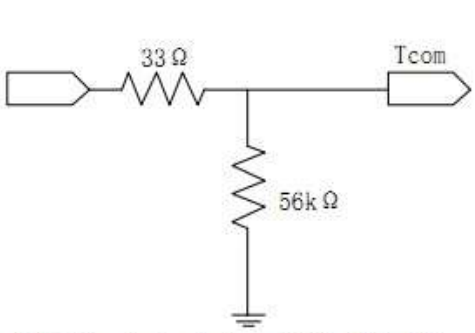

Fig.4-1-2Equivalent circuit (Pin No.23)

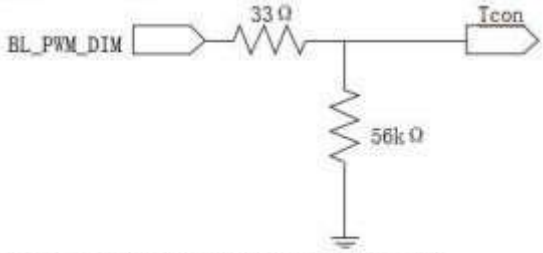

Fig.4-1-3 Equivalent circuit (Pin No.23)

4-2 eDP interface

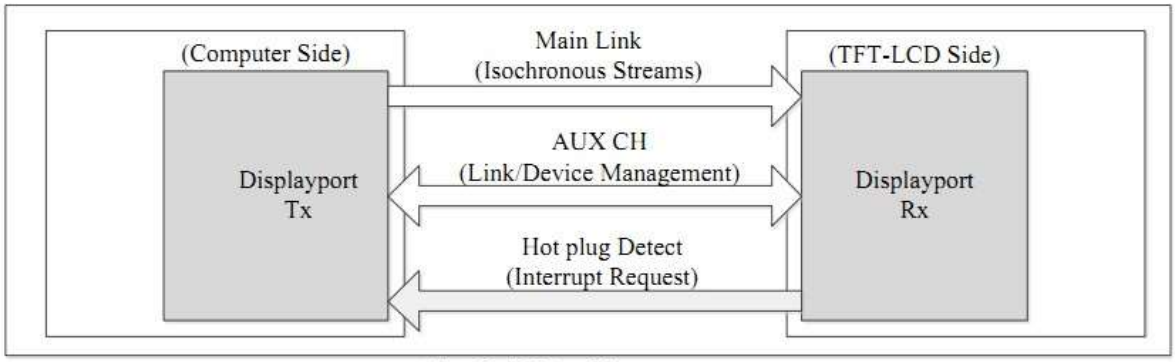

Fig.4-2-1 DP architecture

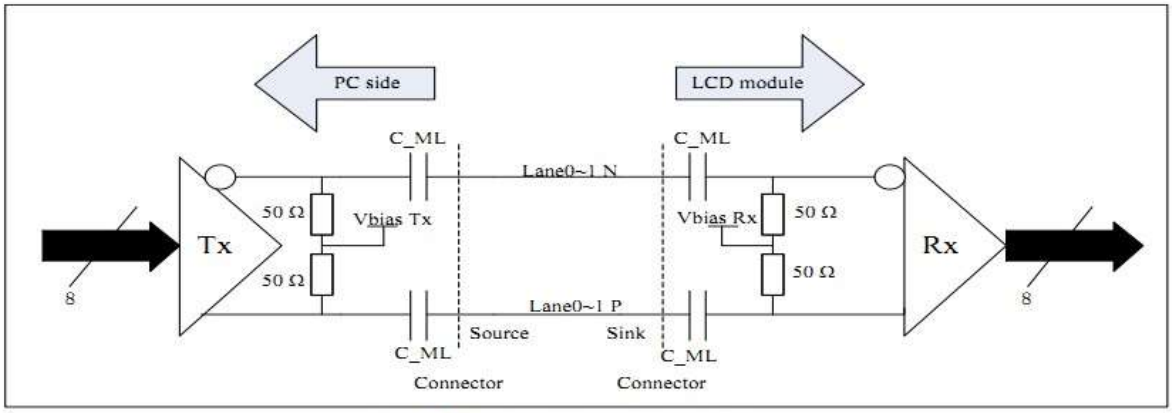

Fig.4-2-2 Main Link differential pair

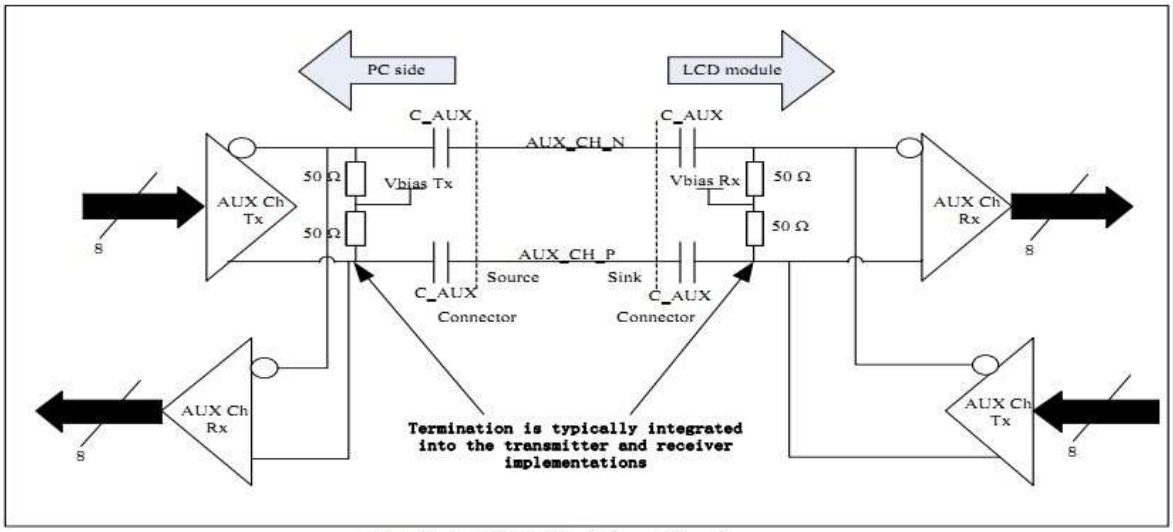

Fig.4-2-3 AUX Link differential pair

Lane0	Lane1
R0-7:0	R1-7:0
G0-7:0	G1-7:0
B0-7:0	B1-7:0
R2-7:0	R3-7:0
G2-7:0	G3-7:0
B2-7:0	B3-7:0
R4-7:0	R5-7:0
G4-7:0	G5-7:0
B4-7:0	B5-7:0

Fig.4-2-4 eDP 2lane 8bit input data mapping

5. Electrical Characteristics 5-1 Absolute Maximum Ratings

Parameter	Symbol	Condition	Ratings		Unit	Remark
			MIN	MAX		
+3.3V supply voltage	VDD	Ta=25℃	-0.3	+3.6	V	
Backlight supply voltage	V_{BL}	Ta=25℃	-0.3	+21	V	
Input voltage(eDP)	VI	Ta=25℃	-0.3	+1.5	V	[Note 5-1]
Input voltage(BL)	V_{BL}_I	Ta=25℃	-0.3	VDD+0.3	V	[Note 5-2]
Storage temperature	Tstg		-10	+60	℃	[Note 5-3]
Operation temperature	Topa		0	+50	℃	

(*) “Absolute Maximum Ratings” is regulations that do not exceed it even momentarily.
(*) Stress beyond those listed under “Absolute Maximum Ratings” may cause permanent damage to the device.
[Note 5-1] eDP signals
[Note 5-2]Backlight control signals (BL_ENABLE,BL_PWM_DIM)
[Note 5-3] Humidity: 90%RH Max.at Ta≦+40℃.
Maximum wet-bulb temperature at +39℃ or less at Ta>+40℃, No condensation.

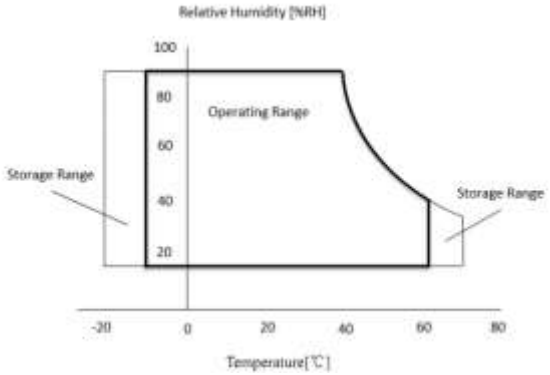

5. DC Characteristics 5-2-1. TFT-LCD panel driving

DC Electrical Characteristics						
Parameter	Symbol	Min.	Typ.	Max.	Unit	Remark
+3.3V supply voltage	VDD	+3.0	+3.3	+3.6	V	[Note 5-2-1]
Permissible input ripple voltage	VRP	-	-	100	mVp-p	VDD=+3.3V
eDP HPD Signal Characteristics						
Parameter	Symbol	Min.	Typ.	Max.	Unit	Remark
HPD High level output voltage	VOH_{HPD}		VDD-0.1			
HPD Low level output voltage	VOL_{HPD}					
eDP AUX Channel Characteristics						
Parameter	Symbol	Min.	Typ.	Max.	Unit	Remark
Unit Interval for AUX channel	UIAUX	0.4	0.5	0.6	μS	
Peak-to-peak voltage at TP1	$V_{AUX-DIFF-pp}$	0.32	-	1.36	V	
AUX DC Common mode Voltage	$V_{AUX-DC-CM}$	0	-	2.0	V	
AUX Short current limit	I_{AUX_SHORT}	-	-	90	mA	
AUX CH termination DC resistor	R_{AUX_TERM}	-	100	-	Ω	Differential input
AUX AC coupling capacitor	C_{AUX}	75	-	200	nF	
Number of pre-charge pulses	Pre-charge pulses	10	-	16	-	
eDP AUX Channel Characteristics						
Parameter	Symbol	Min.	Typ.	Max.	Unit	Remark

Link clock down spreading	Down_Spread_Amplitude	0		0.5	%	
Differential Peak-to-peak Input Voltage at Rx package pins	$V_{RX-DIFFp-p}$	90		1200	mV	
Differential Return Loss at 1.35GHz at Rx package pins	$RL_{RX-DIFF}$	9	-	-	dB	
Differential termination resistance	$R_{RX-TERM}$	-	100	-	Ω	
RX short circuit Current Limit	$I_{RX-SHORT}$		-	50	mA	
Lane Intra-pair Skew at RX package pins	$T_{RX-SKEW-NTRA-PAIR-High-Bit-Rate}$	-	-	TBD	ps	

[Note 5-2-1] ON-OFF conditions for supply voltage

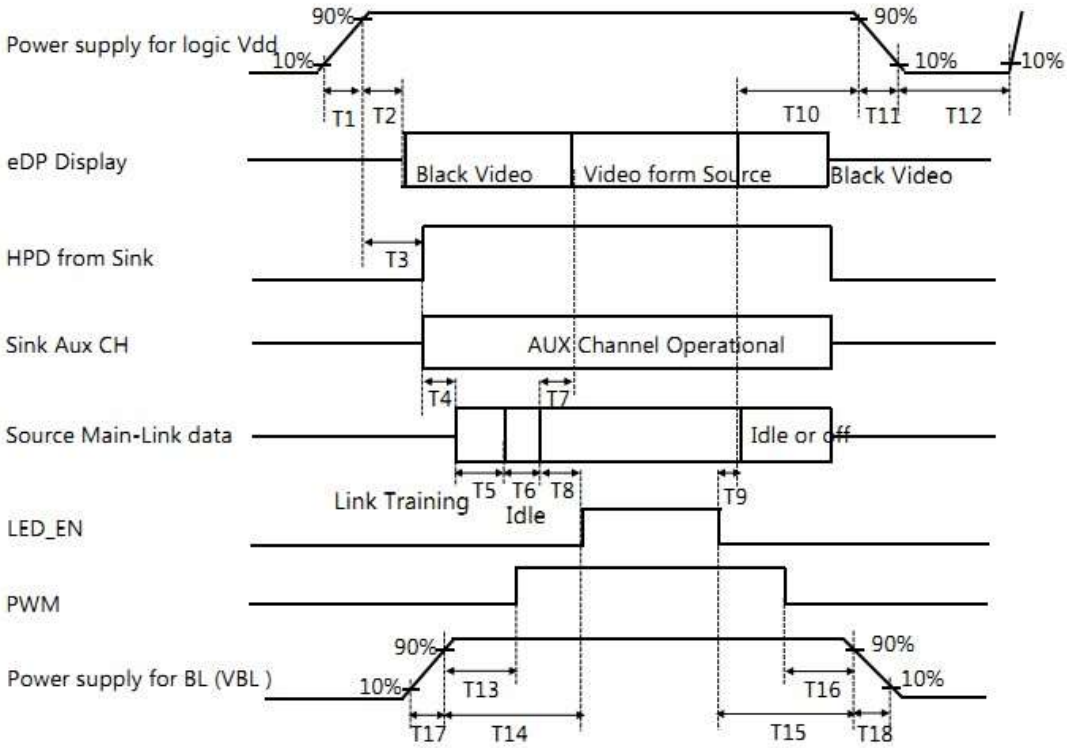

- 0.5ms ≤ T1 ≤ 10 ms
- 0ms ≤ T2 ≤ 200 ms
- 0ms ≤ T3 ≤ 200 ms
- 0ms ≤ T13
- 0ms ≤ T14
- 0ms ≤ T17
- 80ms ≤ T8
- 0ms ≤ T7 ≤ 50ms
- 0ms ≤ T10 ≤ 500 ms
- 0.5ms ≤ T11 ≤ 10 ms
- 500ms ≤ T12
- 0ms ≤ T15
- 0ms ≤ T16
- 0ms ≤ T18

Notes:
1. When the power supply VDD is 0V, keep the level of input signals on the low or keep high impedance.
2. Do not keep the interface signal high impedance when power is on. Back Light must be turn on after power for logic and interface signal are valid.

6 . Backlight driving

The backlight system is an edge-lighting type with white-LED.
(It is usually required to measure under the following condition: Ta=25℃±2℃)

Parameter	Symbol	Min.	Typ.	Max.	Unit	Remark
Supply voltage	V_{BL}		24		V	
Current dissipation	I_{BL}	-	（240）		mA	
Modulated light signal voltage	V_{PWM} H	1.85	-	VDD	V	
	V_{PWM} L	0	-	0.7	V	
Brightness Control Duty Ratio	Duty	1	-	100	%	[Note6-3-1]
Brightness Control pulse width	T_{PWM}	5	-	-	μs	Note6-3-2]
Brightness Control frequency	f_{PWM}	200	-	2,000	Hz	
LED-BL ON/OFF High voltage	V_{CNT}H	1.8	3.3	3.6	V	[Note6-3-3]
LED-BL ON/OFF low voltage	V_{CNT}L	0	-	0.5	V	
Input signal pin current	I_{IN}	-	Vin/51kΩ		μA	BL_ENABLE BL_PWM_DIM
LED lifetime	-	-	30,000	-	h	LED

[Note6-3-1] Vpwm Input : 100%= Max luminance 1%= Min luminance

[Note6-3-2]The minimum value of the dimming signal pulse width is assumed regulations of the width of high and the width of low.

[Note6-3-3] V_{CNT} Input : High = BL turn on, Low or OPEN =BL turn off VBL-ip conditions

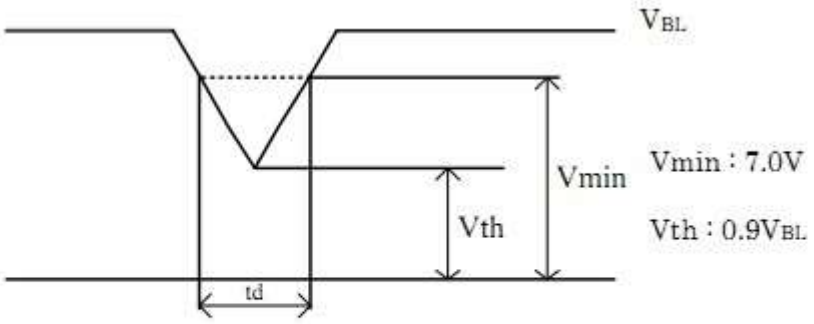

1) Vth≦VBL ＜Vmin : td ≦20ms
2) VBL ＜Vth : The condition of instantaneous voltage drop is apply to input voltage sequences

Rising time V_{BL}:

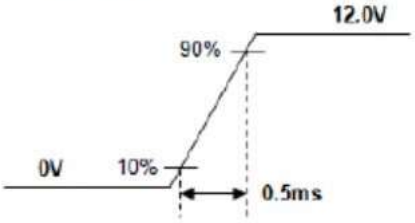

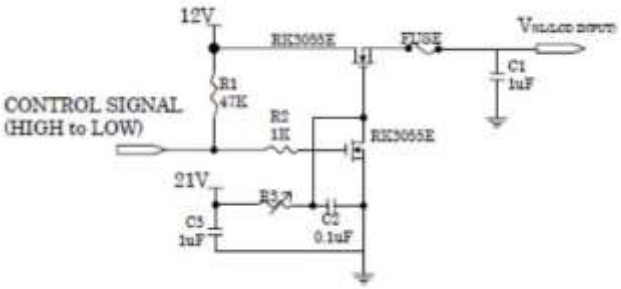

·Measurement condition :

7. Timing characteristics of input signals

7-1.Timing Characteristics

Parameter	Symbol	Value			Unit
		Min.	Typ.	Max.	
DCLK Frequency	fclk	100	141.4	160	MHz
Horizontal display area	thd		1920		pixel
HSYNC period time	th	2080	2142	2400	pixel
HSYNC blanking	thb+ thfp	-	222	-	pixel
Vertical display area	Tvd		1080		H
Frequency	fV	40	60	66	Hz
VSYNC period time	Tv	1090	1100	1238	H
VSYNC blanking	Tvb+ Tvfp	-	20	-	H

7-2. Input data signals and display position on the screen

Displaypositionofinput data(V·H)

7-3 Input sigal,basic display colors and gray scale of each color

	Colors & Gray Scale	Gray Scale	Data signal																							
			R0	R1	R2	R3	R4	R5	R6	R7	G0	G1	G2	G3	G4	G5	G6	G7	B0	B1	B2	B3	B4	B5	B6	B7
			LSB							MSB	LSB							MSB	LSB							MSB
Basic Color	Black	–	0	0	0	0	0	0	0	0	0	0	0	0	0	0	0	0	0	0	0	0	0	0	0	0
	Blue	–	0	0	0	0	0	0	0	0	0	0	0	0	0	0	0	0	1	1	1	1	1	1	1	1
	Green	–	0	0	0	0	0	0	0	0	1	1	1	1	1	1	1	1	0	0	0	0	0	0	0	0
	Cyan	–	0	0	0	0	0	0	0	0	1	1	1	1	1	1	1	1	1	1	1	1	1	1	1	1
	Red	–	1	1	1	1	1	1	1	1	0	0	0	0	0	0	0	0	0	0	0	0	0	0	0	0
	Magenta	–	1	1	1	1	1	1	1	1	0	0	0	0	0	0	0	0	1	1	1	1	1	1	1	1
	Yellow	–	1	1	1	1	1	1	1	1	1	1	1	1	1	1	1	1	0	0	0	0	0	0	0	0
	White	–	1	1	1	1	1	1	1	1	1	1	1	1	1	1	1	1	1	1	1	1	1	1	1	1
Gray Scale of Red	Black	GS0	0	0	0	0	0	0	0	0	0	0	0	0	0	0	0	0	0	0	0	0	0	0	0	0
	⇧	GS1	1	0	0	0	0	0	0	0	0	0	0	0	0	0	0	0	0	0	0	0	0	0	0	0
	Darker	GS2	0	1	0	0	0	0	0	0	0	0	0	0	0	0	0	0	0	0	0	0	0	0	0	0
	⇧	↓	↓								↓								↓							
	⇩	↓	↓								↓								↓							
	Brighter	GS253	1	0	1	1	1	1	1	1	0	0	0	0	0	0	0	0	0	0	0	0	0	0	0	0
	⇩	GS254	0	1	1	1	1	1	1	1	0	0	0	0	0	0	0	0	0	0	0	0	0	0	0	0
	Red	GS255	1	1	1	1	1	1	1	1	0	0	0	0	0	0	0	0	0	0	0	0	0	0	0	0
Gray Scale of Green	Black	GS0	0	0	0	0	0	0	0	0	0	0	0	0	0	0	0	0	0	0	0	0	0	0	0	0
	⇧	GS1	0	0	0	0	0	0	0	0	1	0	0	0	0	0	0	0	0	0	0	0	0	0	0	0
	Darker	GS2	0	0	0	0	0	0	0	0	0	1	0	0	0	0	0	0	0	0	0	0	0	0	0	0
	⇧	↓	↓								↓								↓							
	⇩	↓	↓								↓								↓							
	Brighter	GS253	0	0	0	0	0	0	0	0	1	0	1	1	1	1	1	1	0	0	0	0	0	0	0	0
	⇩	GS254	0	0	0	0	0	0	0	0	0	1	1	1	1	1	1	1	0	0	0	0	0	0	0	0
	Green	GS255	0	0	0	0	0	0	0	0	1	1	1	1	1	1	1	1	0	0	0	0	0	0	0	0
Gray Scale of Blue	Black	GS0	0	0	0	0	0	0	0	0	0	0	0	0	0	0	0	0	0	0	0	0	0	0	0	0
	⇧	GS1	0	0	0	0	0	0	0	0	0	0	0	0	0	0	0	0	1	0	0	0	0	0	0	0
	Darker	GS2	0	0	0	0	0	0	0	0	0	0	0	0	0	0	0	0	0	1	0	0	0	0	0	0
	⇧	↓	↓								↓								↓							
	⇩	↓	↓								↓								↓							
	Brighter	GS253	0	0	0	0	0	0	0	0	0	0	0	0	0	0	0	0	1	0	1	1	1	1	1	1
	⇩	GS254	0	0	0	0	0	0	0	0	0	0	0	0	0	0	0	0	0	1	1	1	1	1	1	1
	Blue	GS255	0	0	0	0	0	0	0	0	0	0	0	0	0	0	0	0	1	1	1	1	1	1	1	1

0: Low level voltage, 1: High level voltage.

Each basic color can be displayed in 256 gray scales from 8 bit data signals.
According to the combination of 24 bit data signals, the 16.7M color display can be achieved on the screen.

8. EDID Specifications (TBD)

9. Optical characteristics

Paramete	Conditions		Min.	Typ.	Max.	Unit	Note
Viewing Angle (CR>10)	Horizontal	θL	-	89	-	degree	[Note9-1,93,9-4,9-6]
		θR	-	89	-		
	Vertical	θT	-	89	-		
		θB	-	89	-		
Contrast Ratio	Center		700	1000	-	-	[Note9-2,94,10-6]
Response Time	Tr+Td		-	25		ms	[Note9-1,95,9-6]
CF Color Chromaticity (CIE1931)	Red x		Typ. -0.03	TBD	Typ. +0.03	-	[Note 9-2,9-6] Normal operation (PWM Duty=100%)
	Red y			TBD		-	
	Green x			TBD		-	
	Green y			TBD		-	
	Blue x			TBD		-	
	Blue y			TBD		-	
	White x			(0.293)		-	
	White y			(0.309)		-	
NTSC ratio	%			(72)		-	
Luminance of white	Y_{LI}			**600**		cd/m	
White uniformity 13pt	δ_W		=0	1.3	1.5		[Note 9-2,9-7]

※The measurement shall be taken 30 minutes after lighting the module at the following rating.
※Condition: PWM Duty = 100%
※The optical characteristics shall be measured in a dark room or equivalent.

[Note 9-1] Measurement of viewing angle range [Note 9-2] Measurement of luminance and Response time. Chromaticity and Contrast.

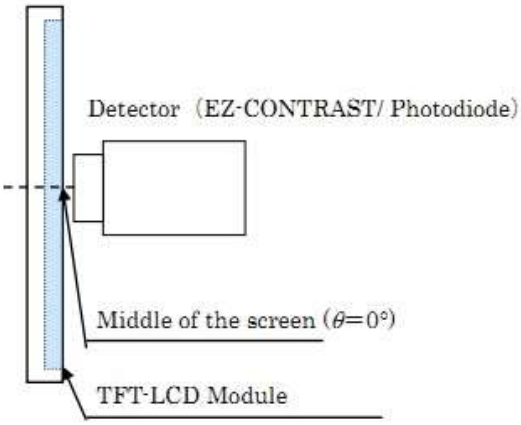

Fig.9-1 Measurement of Viewing angle range and Response time. (Viewing angle range: EZ-CONTRAST, Response time: Photodiode)

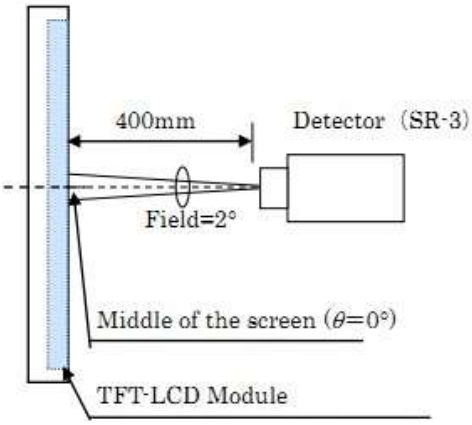

Fig.9-2 Measurement of Contrast, Luminance, Chromaticity, White variation, Crosstalk andColor temperature variation.

[Note 9-3]Definitions of viewing angle range

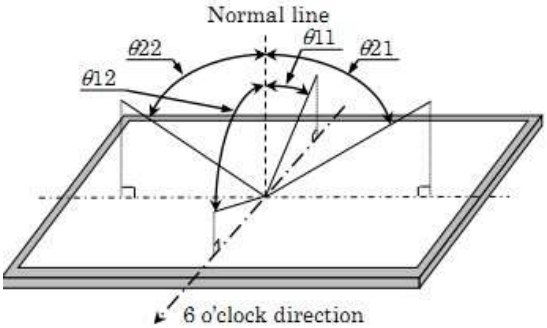

Fig.9-3 Viewing angle

[Note 9-4]Definition of contrast ratio:

The contrast ratio is defined as the following.

$$\text{Contrast Ratio} = \frac{\text{Luminance(Brightness) with all pixels white}}{\text{Luminance(Brightness) with all pixels Black}}$$

[Note 9-5]Definition of response time:

The response time is defined as the following figure and shall be measured by switching the input signal for "black" and "white".

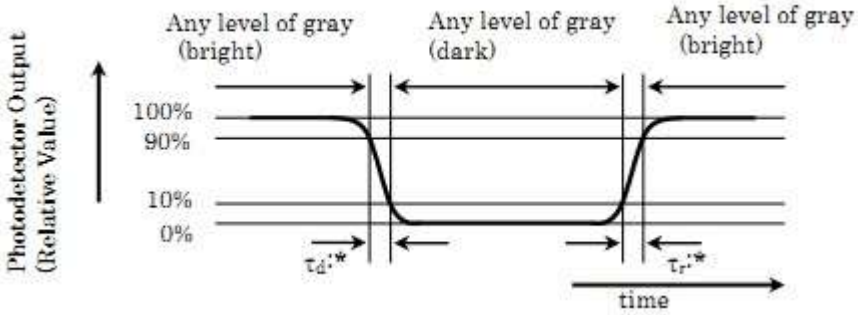

Fig.9-4Responsetime

[Note9-6]This shall be measured at center of the screen.

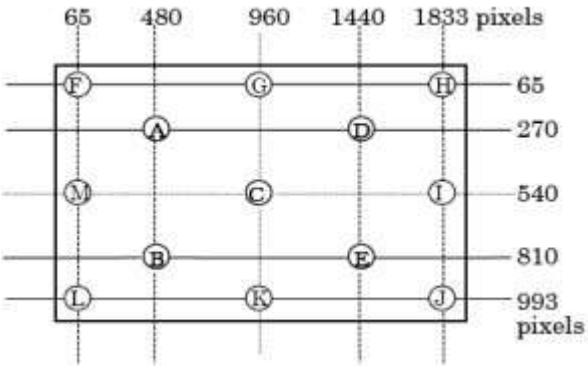

[Note9-7]Definition of white uniformity：

White uniformity is defined as the followingwith5measurements(A~M)

$$\delta w = \frac{\text{Maximum Luminance of 5 Points (Brightness)}}{\text{Minimum Luminance of 5 Points (Brightness)}}$$

10. Display Quality The display quality of the color TFT-LCD module shall be in compliance with the Incoming Inspection Standard.

11. Handling Precautions

a) Be sure to turn off the power supply when inserting or disconnecting the cable.
Please insert for too much stress not to join a connector in the case of insertion of a connector.

b) Be sure to design the cabinet so that the module can be installed without any extra stress such as warp or twist.

c) Since the front polarizer is easily damaged, pay attention not to scratch it.

d) Wipe off water drop immediately. Long contact with water may cause discoloration or spots.

e) When the panel surface is soiled, wipe it with absorbent cotton or other soft cloth.

f) Since the panel is made of glass, it may break or crack if dropped or bumped on hard surface. Handle with care.

g) Since CMOS LSI is used in this module, take care of static electricity and injure the human earth when handling. Observe all other precautionary requirements in handling components.

h) This module has its circuitry PCBs on the side and should be handled carefully in order not to be stressed.

i) Laminate film is attached to the module surface to prevent it from being scratched. Peel the laminate film off slowly just before the use with strict attention to electrostatic charges. Ionized air shall be blown over during the action. Blow off the 'dust' on the polarizer by using an ionized nitrogen gun, etc. Working under the following environments is desirable.

・All workers wear conductive shoes, conductive clothes, conductive fingerstalls and grounding belts without ail.

・Use Ionized blower for electrostatic removal, and peel of the laminate film with a constant speed. (Peeling of it at over 2 seconds)

j) The polarizer surface on the panel is treated with Anti-Glare. In case of attaching protective board over the LCD, be careful about the optical interface fringe etc. which degrades display quality.

k) Do not expose the LCD module to a direct sunlight, for a long period of time to protect the module from the ultra violet ray.

l) When handling LCD modules and assembling them into cabinets, please be noted that long-term storage in the environment of oxidization or deoxidization gas and the use of such materials as reagent, solvent, adhesive, resin, etc. which generate these gasses, may cause corrosion and discoloration of the LCD modules.

m) Liquid crystal contained in the panel may leak if the LCD is broken. Rinse it as soon as possible if it gets inside your eye or mouth by mistake.

n) Disassembling the module can cause permanent damage and should be strictly avoided.
Please don't remove the fixed tape, insulating tape etc that was pasted on the original module.
(Except for protection film of the panel.)

o) Be careful when using it for long time with fixed pattern display as it may cause afterimage.
(Please use a screen saver etc., in order to avoid an afterimage.)

p) If a minute particle enters in the module and adheres to an optical material, it may cause display non-uniformity issue, etc. Therefore, fine-pitch filters have to be installed to cooling and inhalation hole if you intend to install a fan.

q) Epoxy resin (amine series curing agent), silicone adhesive material (dealcoholization series and oxime series), tray forming agent (azo compound) etc, in the cabinet or the packing materials may induce abnormal display with polarizer film deterioration regardless of contact or noncontact to polarizer film. Be sure to confirm the component of them.

r) Do not use polychloroprene. If you use it, there is some possibility of generating Cl2 gas that influences the reliability of the connection between LCD panel and driver IC.

s) Do not put a laminate film on LCD module, after peeling of the original one. If you put on it, it may cause discoloration or spots because of the occurrence of air gaps between the polarizer and the film.

t) Ground module bezel to stabilize against EMI and external noise.

u) When you peel off the protection film
-Be sure to peel off slowly(recommended more than 5sec) and constant speed
-Peeling direction shows the following Figure
-Be sure to ground person with adequate methods such as the anti-static wrist band.
-Be sure to ground all terminals of the PWB connector while peeling of the protection film.
-Ionized air should be blown over during peeling action.
-The protection film must not touch driver-ICs, PWB and all components on PWB.
-If adhesive may remain on the polarizer after the protection film peeling off , please remove with isopropyl alcohol.
Front view

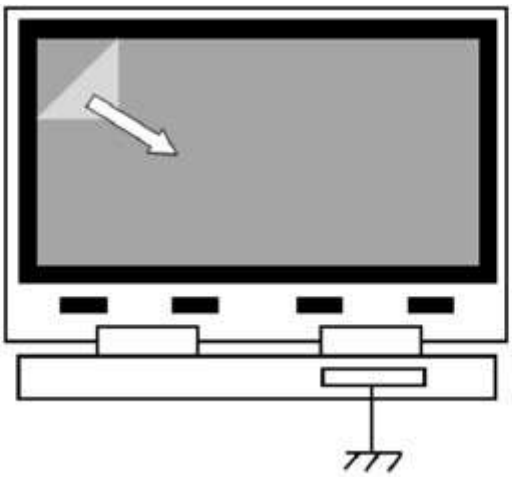

v) Caution for when bending FPC

(1) Not to apply force at connection part (both panel side and PCB side)
(2) Not to fold tightly
(3) Please make sure to push a part where is no components on ,when sticking PCB on the back side of BL, Also, please make sure not to break other components by nail

w) Precautions for Handling Tray

(1) Hold center of short side of tray with both hands when handling one or more trays.

Caution: Do not handle with only one hand.

(2) Always place tray on flat surface.
(3) When stacking trays, please align same shape comer of each tray. One comer is R comer.(Ref.Pic.1)
(4) Maximum stacking quantity is the number of trays inside one box.
Ex:In case of 20pcs LCD module per box(2pcs LCD module per tray),maximum stacking is 10 trays. (Ref.Pic.3)

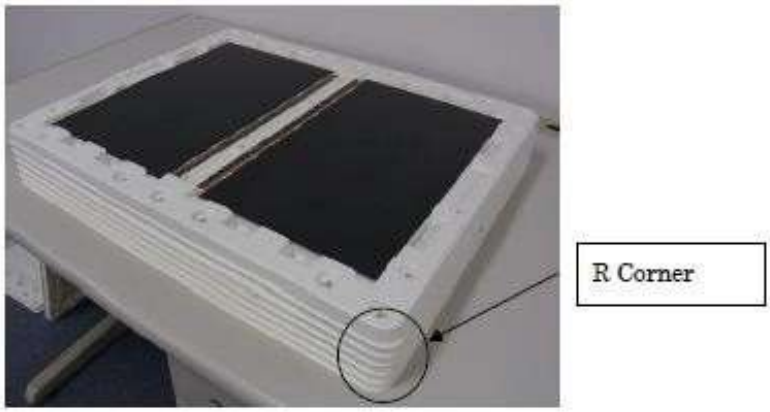

Pic. 1

12. Packaging Condition(TBD)

Piling number of cartons	
Package quantity in one carton	
Carton size	
Total mass of one carton filled with full modules	
Packing form	

13. Label (TBD)

1) Module Bar code label:
TBD
2) Packing bar code label
TBD

14. RoHS Directive

This LCD open-cell is compliant with RoHS Directive.

15. Reliability Test Items

No.	Test Item	Conditions
1	High temperature storage test	Ta=80℃ 72h
2	Low temperature storage test	Ta=-30℃ 72h
3	High temperature & high humidity operation test	Ta=60℃90%RH 72h (No condensation)
4	High temperature operation test	Ta=70℃ 72h
5	Low temperature operation test	Ta=-20℃ 72h

[Result Evaluation Criteria] Under the display quality test condition with normal operation state.
Do not change these condition as such changes may affect practical display function.

[Normal operation state] temperature: +15~+35℃, Humidity: 45~75%, Atmospheric pressure: 86~106kPa

深圳市勋瑞光电科技有限公司 Xunrui photoelectric technology (shenzhen) CO.,LTD.	DESIGN: (设 计)	CHECKED:(检 查)	APPROVED(批 准)	SPECIFICATION FOR BACKLIGHT 规 格			
				LCM CODE:(模组型号)	HBM116FH10C61	EDITION: (版本号)	A
Date: (日期) 2022.01.06	Page: (页数) 1 OF 1	View: (视 角)		DRAW NO.: (出图编号)		EDITION: (版本号)	

30PIN CNT	DESCRIPTION
1	NC
2	GND
3	LANE1-N
4	LANE1-P
5	GND
6	LANE0-N
7	LANE0-P
8	GND
9	AUX-CH-P
10	AUX-CH-N
11	GND
12	LCD-VCC
13	LCD-VCC
14	LCD-TEST
15	GND
16	GND
17	HPD
18	BL-GND
19	BL-GND
20	BL-GND
21	BL-GND
22	BL-ENABLE
23	BL-PWM
24	NC
25	NC
26	BL-POWER
27	BL-POWER
28	BL-POWER
29	BL-POWER
30	NC

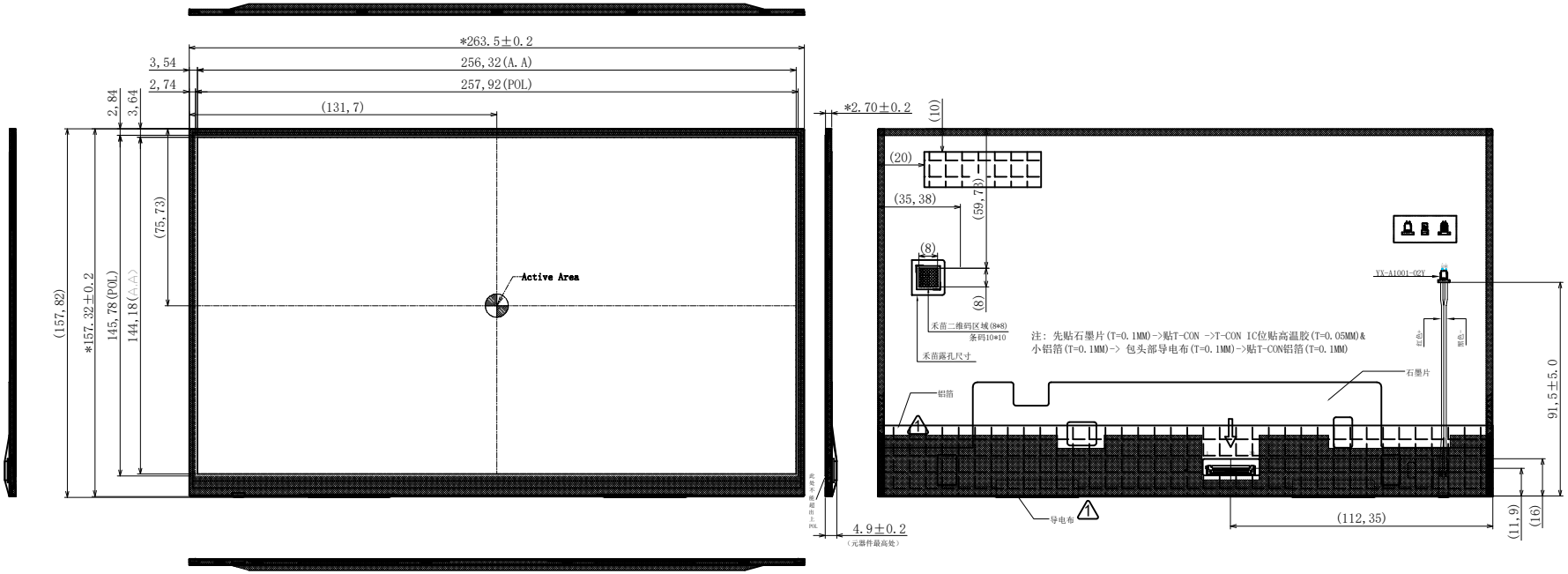

NOTES:

1.LED CIRCUIT DIAGRAM:

所使用的LED不带反向二极管

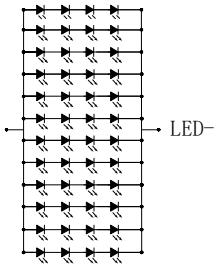

2.Do not scale drawing,Unit:mm.
3.△1 Modification rev.number.
4.Genral Tolerance: ±0.2 ,( ) reference dimension,带*的尺寸为重点管控尺寸.
5.Draft angle 1.5°
6.Operating Temperature: -20~+70°C ,72H; Storage Temperature: -30~+80°C,72H.
7.possession materials are insulated (ex FPC ,LED)
8.同一片背光色度坐标x/y要求：最大值与最小值相差不超过0.02;
9.平面度≤0.6.mm，变形方向为 ，。

REV(标记)	Date (日期)	Description (描述)
2	2022.02.11	增加PIN定义。
1	2022.01.06	增加IC和T-CON屏蔽铝箔胶。
0	2021.12.27	首次发行

Electrical-Optical Characteristics(Ta=25°C):

Item		Symbol	min.	typ.	max.	Unit	Condition
Main screen	Luminance	Lv	550	600	---	cd/m²	If=20*12=240mA (恒定电流测试)
	Uniformity	Avg	75	80		%	
	Colour Coordinate	X	0.263	0.293	0.323		
		Y	0.279	0.309	0.339		
Forward Voltage		Vf	22.4	24	26	V	

• 视角要求:

Customer Name: 客户名称	Check by: 确认	Approved by: 承认	Please Confirm This Drawing On/Before 请 签 回 此 图