深圳市勋瑞光电科技有限公司

Xunrui Shenzhen Optoelectronics Technology Co., Ltd.

LCD MODULE
SPECIFICATION

Customer: _____

Model Name: H103HD-A01

SPEC NO.: _____

Date: 2018.08.05

Version: 01

■ Preliminary Specification

□ Final Specification

For Customer's Acceptance

Approved by	Comment

Approved by	Reviewed by	Prepared by

DOCUMENT REVISION HISTORY

DOCUMENT REVISION FROM TO	DATE	DESCRIPTION	CHANGED BY	CHECKED BY
A	2018.8.05	First Release		

CONTENTS

DOCUMENT REVISION HISTORY **2**

1. GENERAL DESCRIPTIONS **4**

2. MECHANICAL SPECIFICATIONS **5**

3. INTERFACE SIGNALS **7**

4. ABSOLUTE MAXIMUM RATINGS **9**

5. ELECTRICAL SPECIFICATIONS **10**

5.1 BLOCK DIAGRAM 10

5.2 TYPICAL ELECTRICAL CHARACTERISTICS 11

5.3 TIMING CHARACTERISTICS 12

5.3.1 LVDS AC electrical characteristics *12*

5.3.2 LVDS Input Format *14*

5.3.3 Video Signal Timing *15*

5.4 POWER ON/OFF SEQUENCE 16

6. OPTICAL CHARACTERISTICS **17**

6.1 RELIABILITY TEST CONDITIONS 19

7. QUALITY REQUIREMENTS 20

8. DEFINITIONS **23**

9. LIFE SUPPORT APPLICATIONS **23**

10. APPENDIX **23**

1. General Descriptions

- 10.25" (diagonal), 8:3, landscape, normally black, ADS, transmissive, amorphous silicon TFT LCD module
- Display Resolution: 1280 x RGB x 480
- Wide viewing angle (U/D/L/R): Free viewing direction
- Display up to 16.7M colours
- 24-bit one port LVDS interface (with T-CON)
- Anti-Glare front polarizer

2. Mechanical Specifications

The mechanical detail is shown in Fig. 1 and summarized in Table 1 below.

Table 1

Parameters		Specifications	Unit
Outline dimensions	Width x Height	265.20(W)x109.80(H)x5.06(T)	mm
Color TFT 1280 x RGB x 480	Active area	243.84(W) x 91.44(H)	mm
	Display format	1280 x RGB x 480	dots
	Color configuration	RGB Vertical stripes	-
	Dot pitch	(0.0635*3) (W) x 0.1905 (H)	mm
Backlight		NA	-
Weight		TBD	Kg

Customer Name: 客户名称:		Customer's Code: 客户料号:	
Approved by: 承 认:		Module NO.: 模组料号:	
Approval Date: 承认日期:		Edition: 版本号:	A01

第三视角

模组成品图

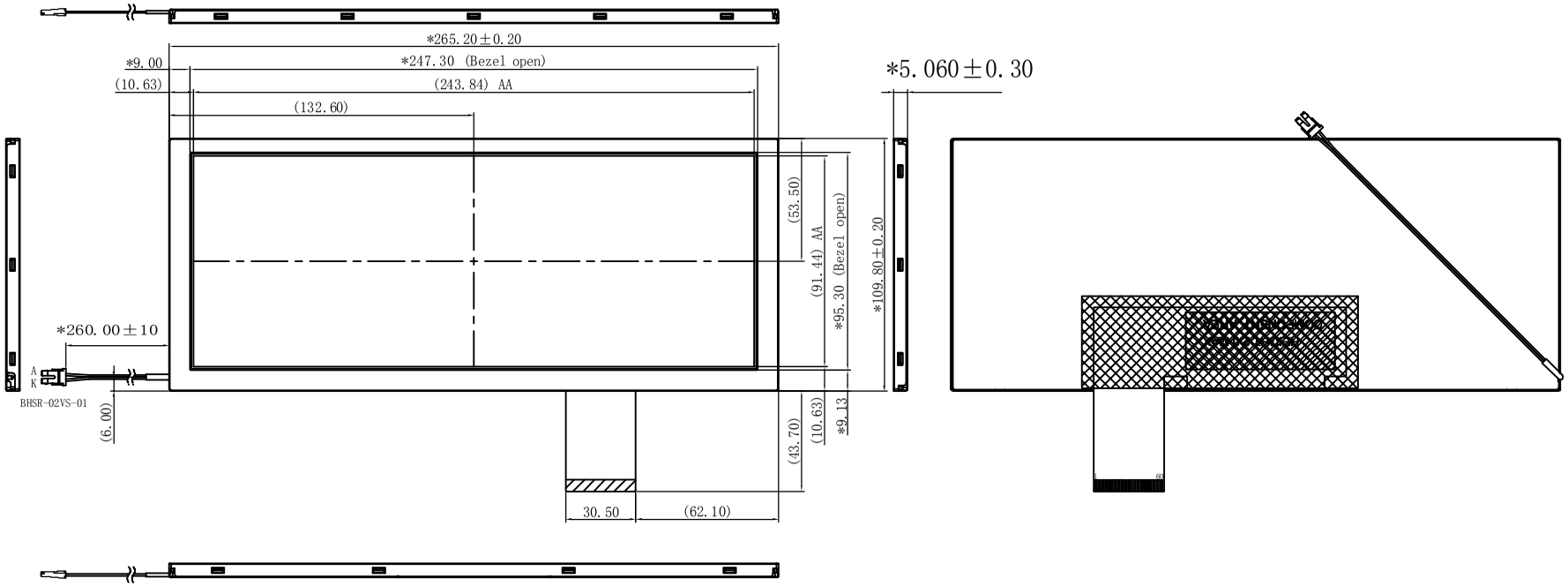

RoHS

Notes:
1. Unit:mm
2. Do not scale drawing
3. All radii without dimension R0.20mm
4. Luminous instensity(9 AVG):
   Module:400cd/m²(Min),500cd/m²(Typ)
5. Uniformity:75%(Min)
   VF:27V(Min);28.8V(Typ);31.5V(Max);IF: 120 mA(Min);125mA(Typ)
6. The color coordinates:

	MIN	TYP	MAX
x	0.240	0.290	0.340
y	0.250	0.300	0.350

7. ⚠ Modification rev.number
8. draft angle 1.0°
9. Genral Tolerance:±0.20mm
10. Mark mold cavity indentification in recess approximately where indicated
11. "*" For important dimension "( )" for reference dimention
12. RoHs must be complied.(Use Lead-free process)

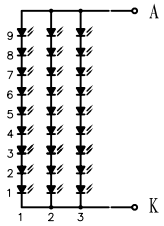

LED 电路图

NO.	TITLE (项目)	QUANTITY (数量)
13	产品标签	1
12	美纹胶	2
11	上铁框	1
10	单面胶	1
9	双面胶	3
8	玻 璃	1
7	增光膜	2
6	扩散膜	1
5	反射膜	1
4	PCB+LED+端子线	1
3	下铁框	1
2	导光板	1
1	胶 框	1

REV (修改)	DATE (日期)	DESCRIPTION (修改内容)	REVISER(修改者)

Design by: (设计)		Check by: (审查)		Approval By: (承认)		Date: (日期)	18.07.25	Page: (页数)	1/1

深圳市勋瑞光电科技有限公司
Xunrui Shenzhen Optoelectronics Technology Co., Ltd.

3. Interface Signals

Table 2: Pin Assignments for the LCD Connector

Pin No.	Symbol	Description	Remarks
1	AGND	Ground	
2	NC	No connect	
3	DVDD	Power pin	3.3V typ.
4	GND	Ground	
5	NC	No connect	
6	DVDD	Power pin	
7	GND	Ground	
8	NC	No connect	
9	NC	No connect	
10	NC	No connect	
11	NC	No connect	
12	NC	No connect	
13	NC	No connect	
14	NC	No connect	
15	GND	Ground	
16	DVDD	Power pin	
17	GND	Ground	
18	PIND3	Positive LVDS differential data input 3+	
19	NIND3	Negative LVDS differential data input 3−	
20	GND	Ground	
21	PINC	Positive LVDS differential clock input CLK+	
22	NINC	Negative LVDS differential clock input CLK-	
23	GND	Ground	
24	PIND2	Positive LVDS differential data input 2+	
25	NIND2	Negative LVDS differential data input 2−	
26	GND	Ground	
27	PIND1	Positive LVDS differential data input 1+	
28	NIND1	Negative LVDS differential data input 1−	
29	GND	Ground	
30	PIND0	Positive LVDS differential data input 0+	
31	NIND0	Negative LVDS differential	

Pin No.	Symbol	Description	Remarks
		data input 0−	
32	GND	Ground	
33	GND	Ground	
34	GRB	Global reset pin	
35	STBYB	Standby mode	L: Standby H: Normal
36	NC	No connect	
37	DVDD	Power pin	
38	NC	No connect	
39	GND	Ground	
40	NC	No connect	
41	NC	No connect	
42	NC	No connect	
43	GND	No connect	
44	DVDD	Power pin	
45	GND	Ground	
46	NC	No connect	
47	NC	No connect	
48	NC	No connect	
49	NC	No connect	
50	NC	No connect	
51	NC	No connect	
52	NC	No connect	
53	GND	Ground	
54	DVDD	Power pin	
55	SELB	6bit/8bit mode select	
56	VGH	Positive power for TFT	
57	DVDD	Power pin	
58	VGL	Negative power for TFT	
59	GND	Ground	
60	BIST	BIST	

4. Absolute Maximum Ratings

The product or its functions may subject to permanent damage if it's stressed beyond those absolute maximum ratings listed below. Exposure to absolute maximum rating conditions for extended periods may affect display module reliability.

Table 3: Absolute Maximum Ratings & Environmental Conditions

Item	Symbol	Min.	Max.	Unit
Digital supply voltage	DVDD	-0.3	+3.96	V
Digital I/O input signals	V_{IO}	-0.3	VDD+0.3	V
Relative Humidity (at 60°C, Note 3)	RH		90	%
Operating Temperature (Note 2)	Topr	-30	+85	°C
Storage Temperature	Tstg	-40	+90	°C

Note 1: GND=VSS=0V.

Note 2: Panel surface temperature should not exceed 70°C.

Note 3: No condensation allowed under any condition.

Note 4: No performance guarantee below -20°C

[Caution]

Do not display fixed pattern for prolonged hours because it may develop image sticking on the display.

5. Electrical Specifications

5.1 Block Diagram

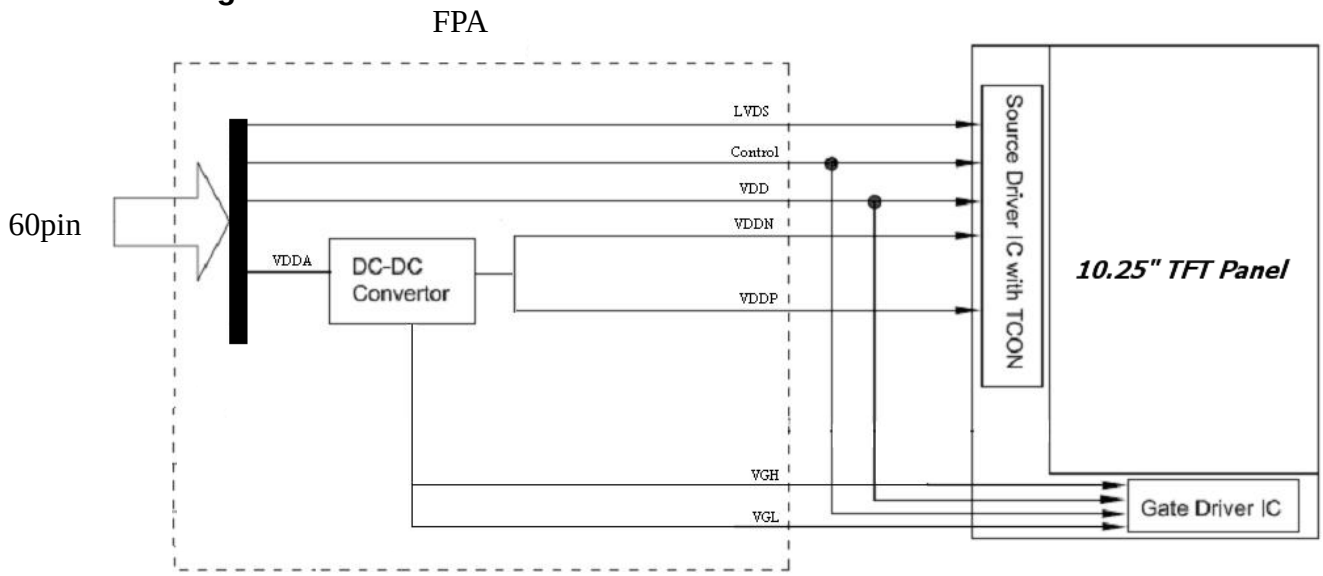

Figure 2: Block Diagram

5.2 Typical Electrical Characteristics

Table 4: DC characteristic

Parameter	Symbol	Min.	Typ.	Max.	Unit
Power supply voltage f	DVDD	3.0	3.3	3.6	V
Power supply current for DCDC	IDVDD (Note 2)	-	-	500	mA
Driver input high signal voltage	V_{IH}	0.7*VCC	-	VCC	V
Driver input low signal voltage	V_{IL}	GND		0.3*VCC	V

Note 1: There is tolerance in optimum LCD driving voltage during production and it will be within the specified range.

Note 2: All white pattern.

Table 5: LVDS DC Characteristics

Parameter	Symbol	Min.	Typ.	Max.	Unit
Differential input high Threshold voltage	R_{XVTH}	+0.1	-		V
Differential input low threshold voltage	R_{XVTL}		-	-0.1	V
Differential input common Mode voltage	R_{XVCM}	1	1.2	1.7-| V_{ID} |/2	V
LVDS input voltage	V_{INLV}	0.7		1.7	V
Differential input voltage	| V_{ID} |	0.2		0.6	V
Differential input leakage Current	RV_{Xliz}	-10	-	+10	uA

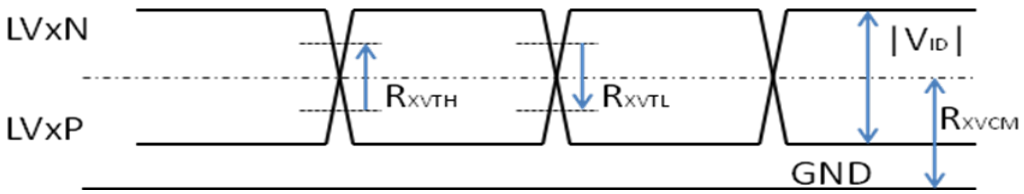

5.3 Timing Characteristics

5.3.1 LVDS AC electrical characteristics

Table 6: AC Characteristic of LVDS

Parameter	Symbol	Min.	Typ.	Max.	Unit
Clock frequency	F_{LVCYC}	20	-	85	MHz
Clock period	T_{LVCYC}	11.76			ns
1 data bit time	UI		1/7		T_{LVCYC}
Clock high time	TLVCH		4		UI
Clock low time	TLVCL		3		UI
Position 1	T_{POS1}	-0.2	0	0.2	UI
Position 0	T_{POS0}	0.8	1	1.2	UI
Position 6	T_{POS6}	1.8	2	2.2	UI
Position 5	T_{POS5}	2.8	3	3.2	UI
Position 4	T_{POS4}	3.8	4	4.2	UI
Position 3	T_{POS3}	4.8	5	5.2	UI
Position 2	T_{POS2}	5.8	6	6.2	UI
Input eye width	T_{EYEW}	0.6			UI
Input eye border	T_{EX}			0.2	UI
LVDS wake up time	T_{ENLVDS}			150	us

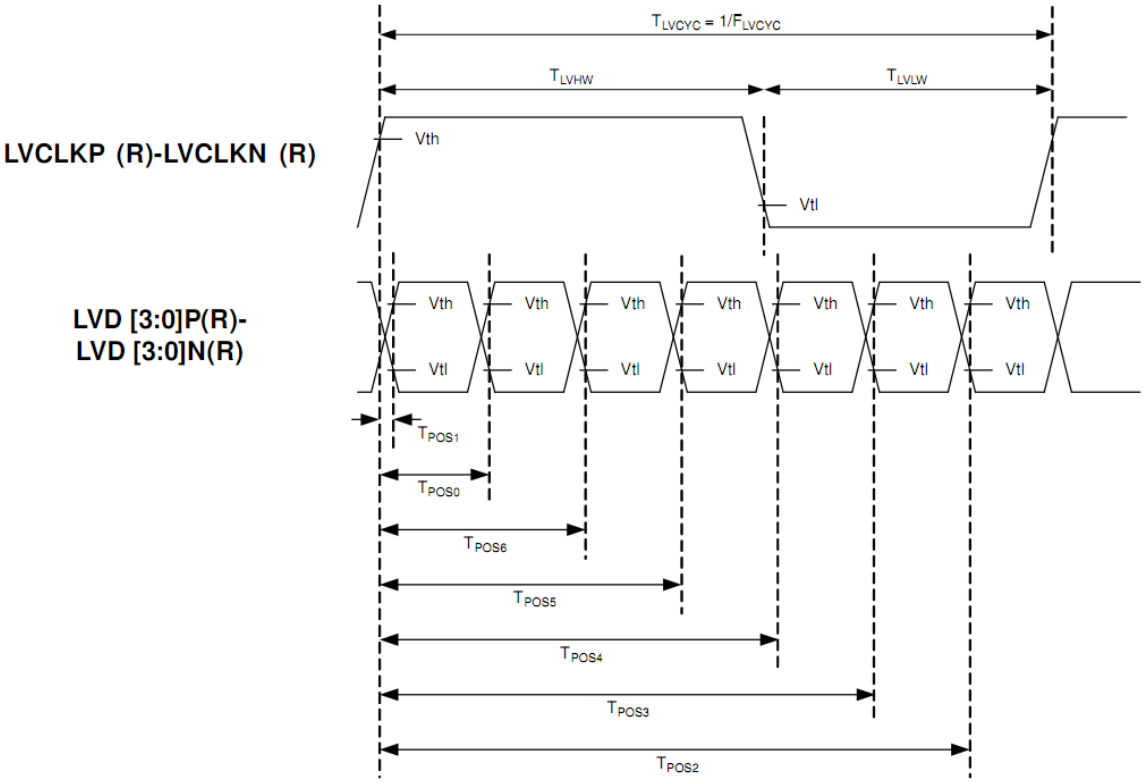

Figure 3: LVDS DC character

Single-ended:
LVD[3:0]P,
LVD[3:0]N

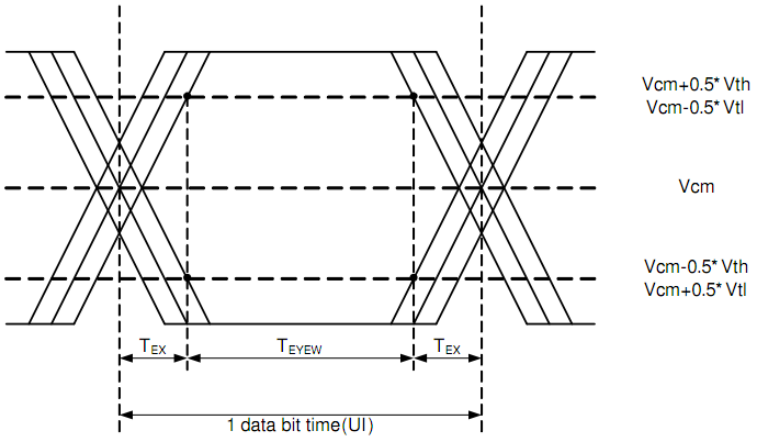

Differential:
LVD[3:0]P-LVD[3:0]N

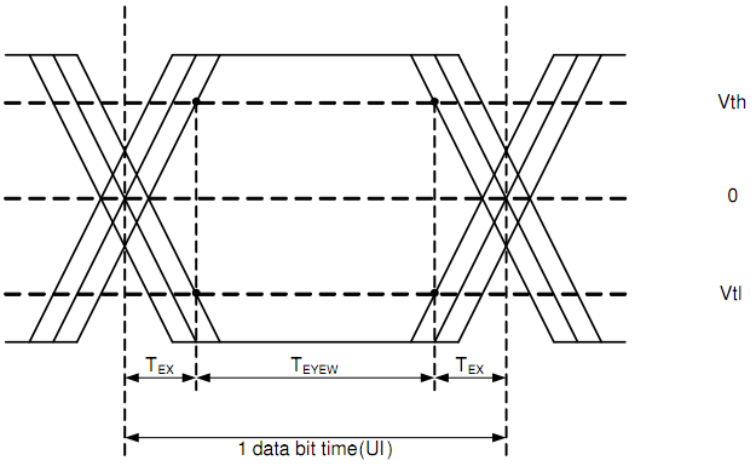

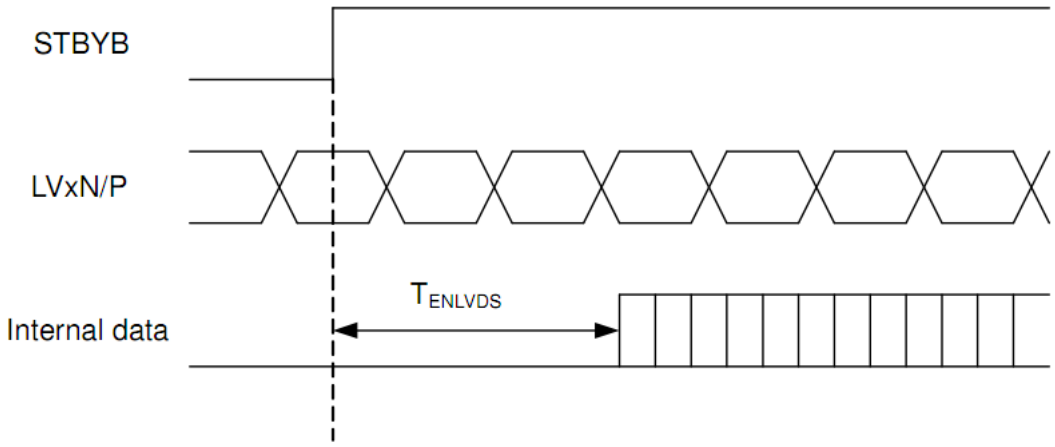

Figure 4

5.3.2 LVDS Input Format

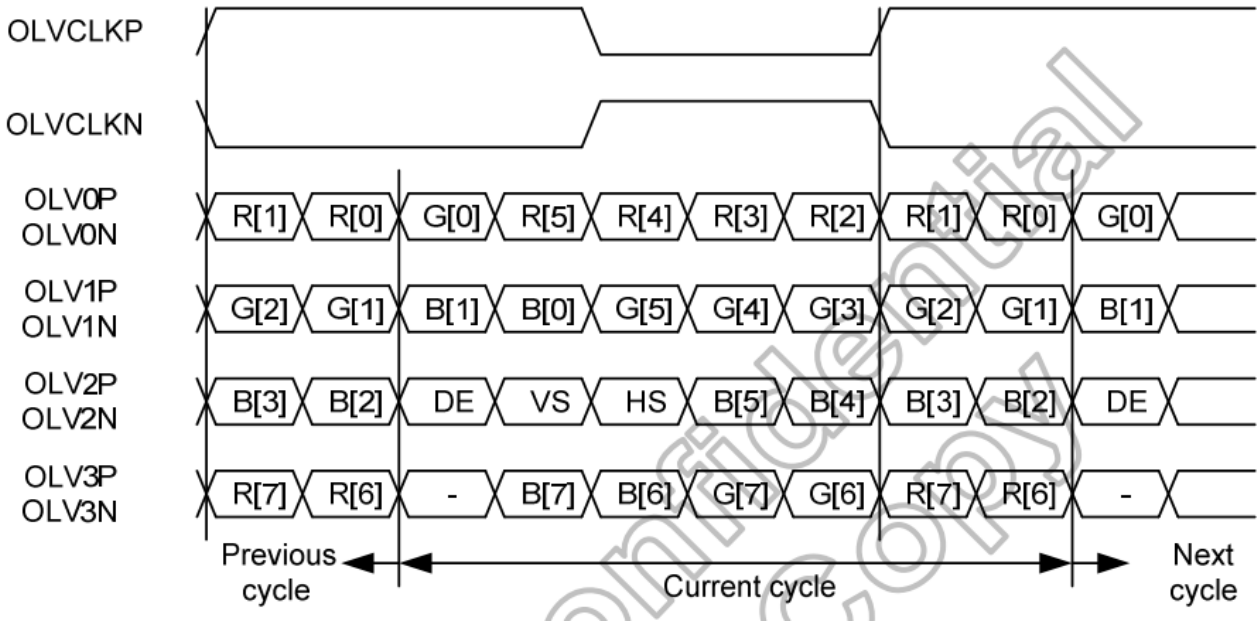

Figure 5: 1port LVDS signals, VESA format, 8-bit mode

5.3.3 *Video Signal Timing*

Table 7: Video signal timing

Symbol	Parameter	Conditions	Related Pins	Min.	Typ.	Max.	Unit
VP	Vertical Total	-	VSYNC	487	493	624	Line
VS	VSYNC Low Pulse Width	-	VSYNC	1	3	20	Line
VBP	Vertical Back Porch	-	VSYNC	2	5	255	Line
VFP	Vertical Front Porch	-	VSYNC	5	8	260	Line
VDISP	Vertical Active Area	-	VSYNC, HSYNC	-	480	-	Line
HP	Horizontal Total		HSYNC	1309	1322	1664	
HS	HSYNC Low Pulse Width	-	HSYNC	10	12	255	DCK
HBP	Horizontal Back Porch	-	HSYNC	5	16	255	DCK
HFP	Horizontal Front Porch	-	HSYNC	24	26	260	DCK
HDISP	Horizontal Active Area	-	HSYNC	-	1280	-	DCK
F_{frame}	Frame Frequency	-	CLK	-	60	-	Hz
f_{CLK}	CLK frequency		CLK	38.3	39.1		MHz

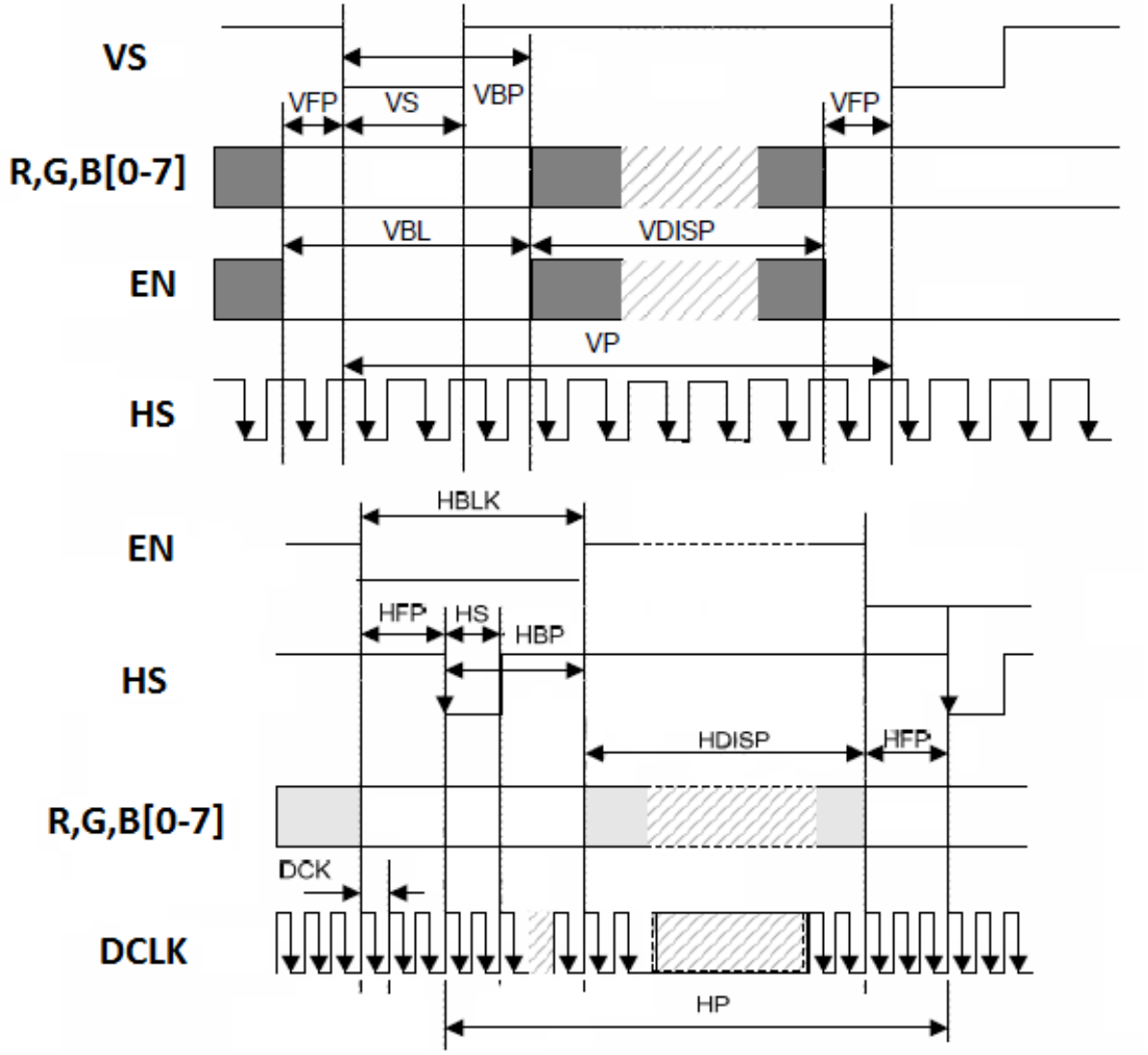

Figure 6

5.4 Power On/Off Sequence

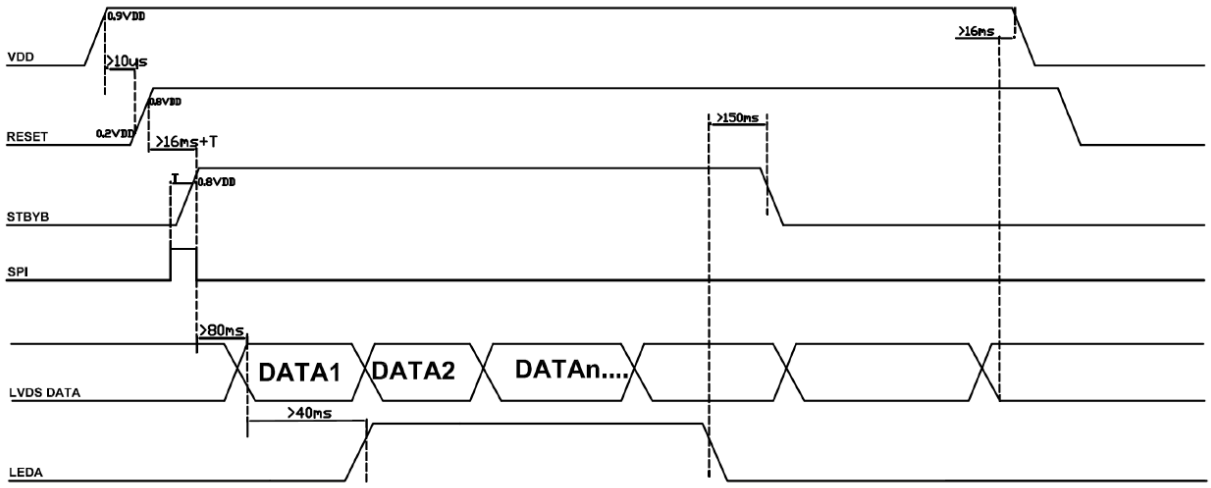

Figure 7: Power on/off sequence

6. Optical Characteristics

Conditions unless specified otherwise:

- Ta = 25°C
- Supply voltage = 3.3 volts
- Elapsed time from switch on is greater than 30 minutes
- RGB, white and black test patterns only
- Factory settings
- Brightness = 100% unless specified
- Measurements are conducted at ambient temperature and perpendicular unless specified

Table 8 : Optical characteristics

Items		Symbol	Condition		Min.	Typ.	Max.	Unit	Note
Response Time		T_R+T_F	Ta = 25°C	Viewing normal angle θ=ϕ=0°	-		40	ms	(Note 1)
Viewing Angle (Centre)	12’/ 6’	θ2, θ1	Ta=25°C	CR≥10	-	80	-	deg.	(Note 2)
	9’, 3’	ϕ2, ϕ1		CR≥10	-	80	-		

Note 1: The electro-optical response time measurements shall be made as Figure 7 by switching the “data” input signal OFF and ON. The times needed for the luminance to change from 10% to 90% s T_r, and 90% to 10% is T_f.

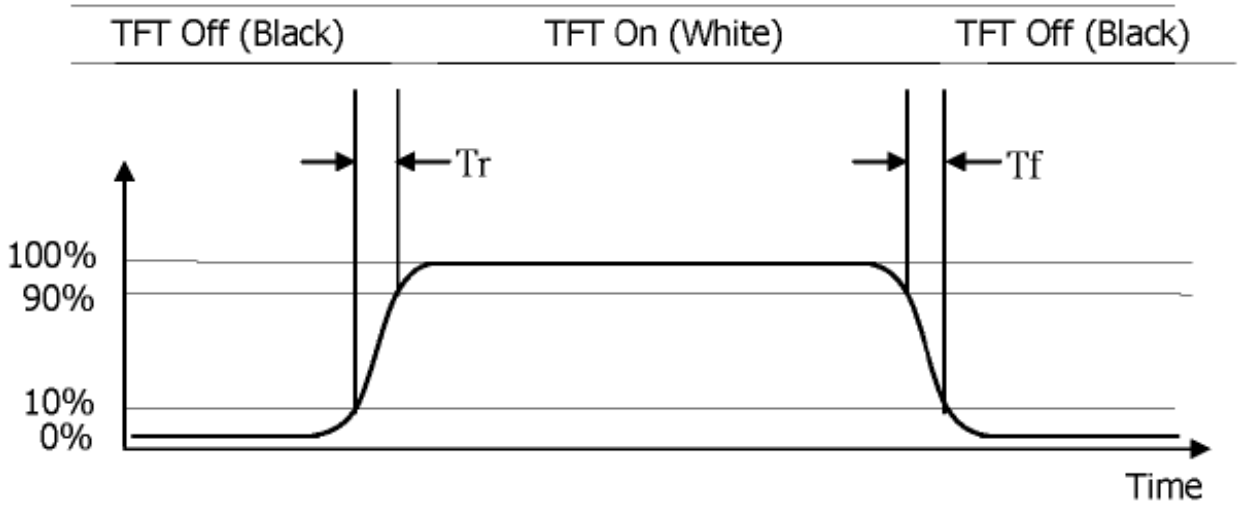

Figure 8: Response Time Testing

Note 2: The definitions of viewing angle.

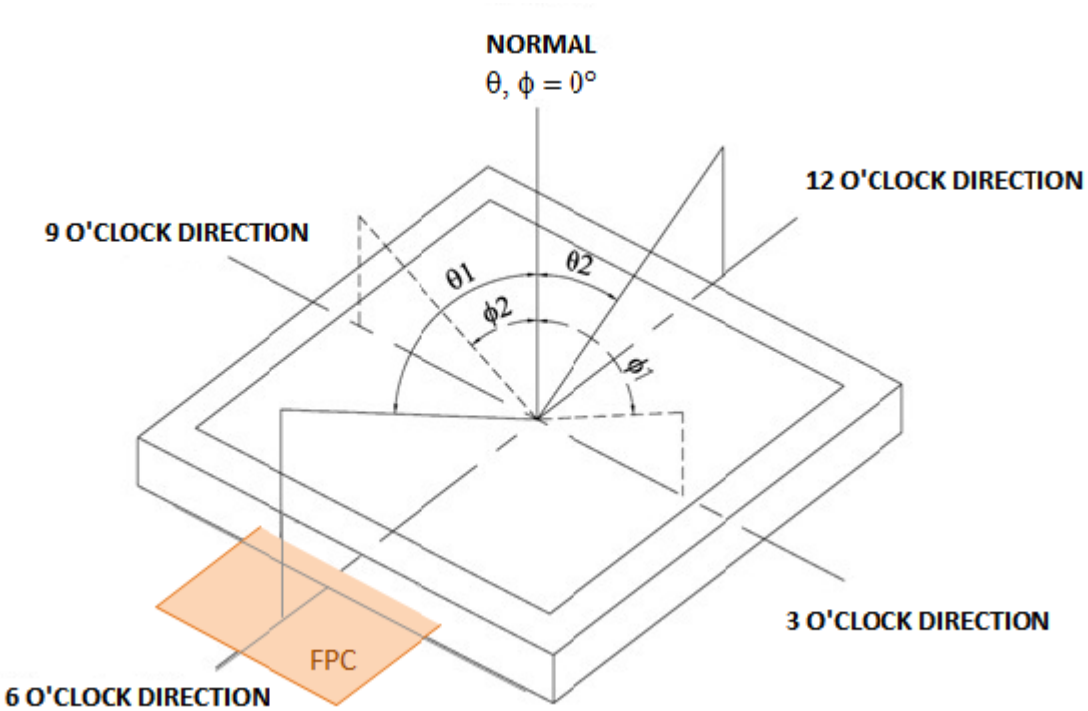

Figure 9: ISO-Contrast Plot (for reference) (Ta = 25°C)(TBD)

7. Reliability Tests / Environmental

7.1 Reliability Test Conditions

Table 9: List of Reliability Tests

Test		Symbol	Condition	Sample Qty.	Remark
1	High Temperature Storage	HST	+80°C /240hrs	4pcs	
2	Low Temperature Storage	LST	-30°C / 240 hrs	4pcs	
3	High Temperature Operating (Note)	HOT	+70°C / 240 hrs	4pcs	
4	Low Temperature Operating	LOT	-20°C / 240hrs	4pcs	
5	Accelerated Humidity Test Operating	AHTO	+60°C / 90% RH / 240 hrs	4pcs	
6	Temperature Shock Test	TST	-20°C <> +70°C, 30min/5min/30min,200cycles Non-Operating	4pcs	
7	UV exposure resistance	UV	1KW Xenon / 100 hrs Power off.	2pcs	

Note 1: LCD panel surface temperature should not exceed 80ºC.

8. Quality Requirements

1. Inspection Environment

1.1.Inspection environment conditions:

a. Room temperature: 22±3 ℃

b. Humidity: 55 ± 10% RH

c. Inspection Ambient Illumination : White fluorescent lamp light brightness -- 500~1000 Lux (150~250 Lux for function test)

1.2. Viewing Distance

The distance between the panel and the inspector's eyes shall be at least 50cm

1.3. Viewing Angle

performing in front of the panel , All directions for inspecting the sample should be within 45° to perpendicular line.

2.1.4. Inspection Area :

Display Area (Active Area)

2. Main Defect Definitions

2.1 Black / White Spots

Points on display which appear Black/ white

These defects do not vary in size or intensity (contrast) when contrast is varied.

2.2. Dark / Bright Lines

Lines on display which appear dark/bright. such as vertical, horizontal, or cross lines.

2.3. Bright Dot Defects

Dots(sub-pixels) on display which appear bright in the display area and visible at Black Pattern.

2.4. Dark Dot Defects

Dots(sub-pixels) on display which appear dark in the display area at R,G,B Color Pattern.

2.5. Mura

Mura on display which appears darker / brighter against background brightness on parts of display area

2.6. Visual Inspection

Inspection for Panel when the unit turns on.

2.7. Appearance Inspection

External inspection for Panel when the unit turns off.

9. Inspection Criteria

9.1 Visual Inspection Criteria

Dimensional unit : mm

Table 10: List of reliability tests

Items		Details	Inspection Criteria	
			A-Area and B-Area	C- Area
Appearance Inspection	Foreign Material Glass Dent Spots Extraneous Substances	Circular Type	D≤0.2: Ignore 0.2<D≤0.4: N≤3 Distance≥ 20mm	Ignore
		Linear Type	W≤0.05: Ignore 0.05<W≤0.08, L≤3: N≤3 W>0.08: N=0 L>3: N=0 Distance≥ 20mm	
	Scratch	-		
Visual (Function) Inspection	Foreign Material	Circular Type	D≤0.2: Ignore 0.2<D≤0.4: N≤3 Distance≥ 20mm	Ignore
		Linear Type	W≤0.05: Ignore 0.05<W≤0.08, L≤3: N≤3 W>0.08: N=0 L>3: N=0 Distance≥ 20mm	
	PI Scratch/Dent	-	D≤0.2: Ignore 0.2<D≤0.4: N≤3 Distance≥20mm	Ignore
	Pixel Defects	Bright Dot	N=0	Ignore
		Dark Dot	N ≤5（Distance≥20mm）	
		Bright + Dark Dot	N ≤5（Distance≥20mm）	
	Polarizer Dent/ Bubble	-	D≤0.25: Ignore 0.25<D≤0.4: N≤3 Distance≥20mm	
	Display non uniformity	-	No visible(2% ND filter is used)	

Remark: The determination of all defects is based on the panel with Polarizer.

※ Note 1)

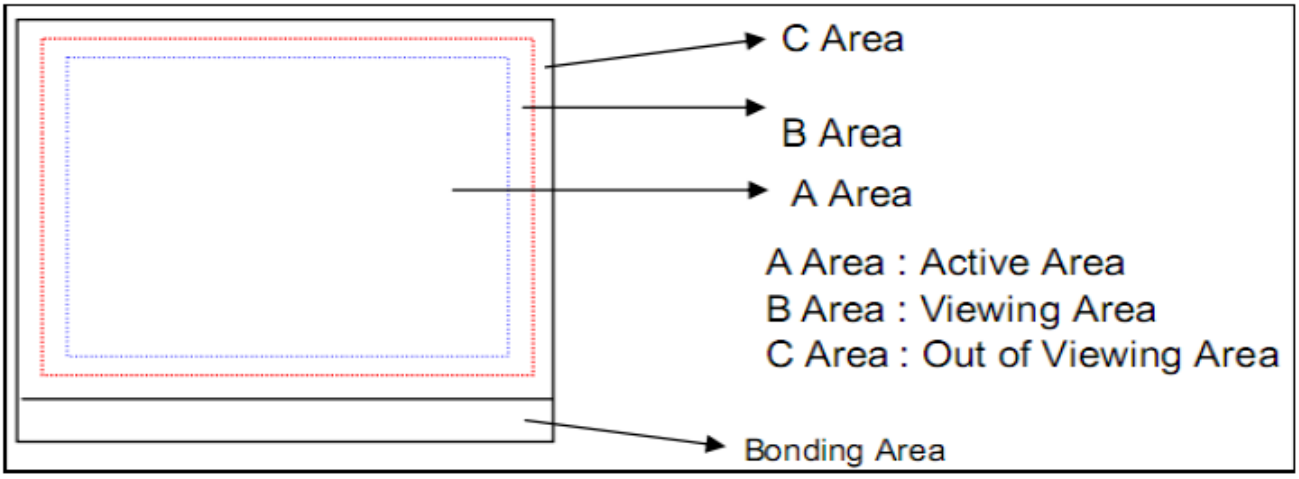

※ Note 2) D = Diameter, L = Length, W = Width, N = Number

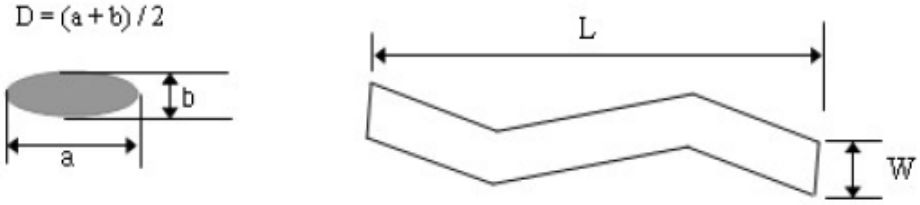

※Note 3) For pixel defect, dot means a sub-pixel. Dot defects should be larger than half size of a sub-pixel. Dot which is invisible through 5% ND filter or smaller than 1/2 of sub-pixel size will not counted as "1 dot" defect.

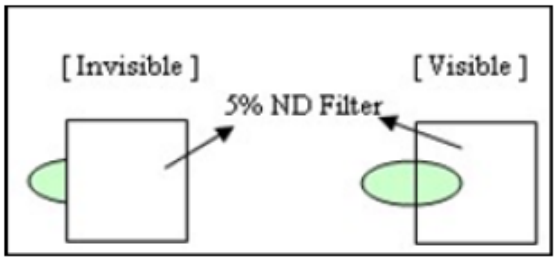

"No dot defect" (=ignored) "1 dot defect" (=counted)

"1 dot defect" (=counted) "No dot defect" (=ignored)

10. Definitions

Data sheet status	
Objective Specification	This data sheet contains target or goal specifications for product development.
Preliminary Specification	This data sheet contains preliminary data; supplementary data may be published later.
Product Specification	This data sheet contains final product specification.
Limiting values	
Limiting values given are in accordance with the Absolute Maximum Rating. Stress above one or more of the limiting values may cause permanent damage to the device. These are stress ratings only and operating of the device at these or any other conditions above those given in the Characteristics sections of the specification is not implied. Expose to limiting values for extended periods may affect device reliability. Device is functional within the limiting conditions doesn't imply the same performance over the covered conditions, customer is required to decide the best range for the final applications.	

11. Life Support Applications

These products are not designed for use in life saving appliances, devices or systems where malfunctioning of these products can reasonably be expected to result in personal injury. Customers using or selling these products for use in such applications do so at their own risk and agree full non liability of Varitronix Limited for any damages or losses resulting from such improper use or sale.

12. Appendix