深圳市勋瑞光电科技有限公司
Xunrui photoelectric technology （shenzhen） CO,.LTD.

Product Specifications

Customer	
Model Name	H080IWS50E3501
Description	Standard LCD Module 800(RGB)x600 Dots 8.0" TFT LCD
Date	2018/9/13
Revision	1.0

Customer Approval	
Date	
The above signature represents that the product specifications,testing regulation, and warranty in the specifications are accepted	

Engineering			
Check	**Date**	**Prepared**	**Date**

深圳市勋瑞光电科技有限公司
Xunrui photoelectric technology （shenzhen）CO,.LTD.

Table of Contents

1. Record of Revision....3
2 General Specifications....4
3 Input/Output Terminals....5
4 Absolute Maximum Ratings....6
5 Electrical Characteristics....8
6 Optical Characteristics....12
7 Environmental / Reliability Tests....18
8 Mechanical Drawing....20
9 Packing....20
10 Precautions For Use of LCD modules....22

深圳市勋瑞光电科技有限公司
Xunrui photoelectric technology （shenzhen）CO,.LTD.

1. Record of Revision

Rev	Issued Date	Description	Editor
1.0	2018/9/13	First Release.	Richliang

2 General Specifications

Feature		Spec
Characteristics	Size	8 inch
	Resolution	800(horizontal)*600(Vertical)
	Interface	RGB
	Connect type	Connector
	Color Depth	262K
	Technology type	a-Si
	Display Spec. Pixel pitch (mm)	TBD
	Pixel Configuration	R.G.B. Vertical Stripe
	Display Mode	Normally White
	Driver IC	TBD
	Surface Treatment	HC
	Viewing Direction	12 O'CLOCK
Mechanical	LCM (W x H x D) (mm)	183*141*6.25
	Active Area(mm)	162*121.5
	With /Without TSP	Without TSP
	Weight (g)	TBD
	LED Numbers	27 LEDs

Note 1: Viewing direction is follow the data which measured by optics equipment.
Note 2: Requirements on Environmental Protection: RoHS
Note 3: LCM weight tolerance: +/- 5%

3 Input/Output Terminals

model is FH12A-50S-0.5SH manufactured by Hirose.

No.	Symbol	Description
1~4	NC	No connection
5	GND	Power ground
6	VCOM	Common voltage
7	VCC	Power for Digital circuit
8	MODE	DE/SYNC mode select (Note3)
9	DE	Data Input Enable
10	VS	Vertical Sync Input
11	HS	Horizontal Sync Input
12	B7	Blue data(MSB)
13	B6	Blue data
14	B5	Blue data
15	B4	Blue data
16	B3	Blue data
17	B2	Blue data
18	B1	Blue data
19	B0	Blue data(LSB)
20	G7	Green data (MSB)
21	G6	Green data
22	G5	Green data
23	G4	Green data
24	G3	Green data
25	G2	Green data
26	G1	Green data
27	G0	Green data (LSB)
28	R7	Red data (MSB)
29	R6	Red data
30	R5	Red data
31	R4	Red data
32	R3	Red data
33	R2	Red data
34	R1	Red data

35	R0	Red data (LSB)
36	GND	Power ground
37	DOCLK	Sample clock
38	GND	Power ground
39	L/R	Right/ left selection (Note2,5)
40	U/D	Up/down selection (Note2,5)
41	VGH	Gate ON voltage
42	VGL	Gate OFF voltage
43	AVDD	Power for Analog circuit
44	RESET	Global reset pin.(Note1)
45	NC	No connection
46	VCOM	Common voltage
47	DITHB	Dithering function (Note 4)
48	GND	Power ground
49	NC	No connection
50	NC	No connection

I: input, O: output, P: Power

Note 1: Global reset pin. Active Low to enter Reset State. Suggest to connecting with an RC reset circuit for stability. Normally pull high.

Note 2: Selection of scanning mode

Setting of scan control input		Scanning direction
U/D	R/L	
GND	V_{CC}	Up to down, left to right
V_{CC}	GND	Down to up, right to left
GND	GND	Up to down, right to left
V_{CC}	V_{CC}	Down to up, left to right

Note 3: DE/SYNC mode select, Normally pull high.
H: DE mode.
L: HS/VS mode.

Note4: Dithering function enable control.Normally pull high.
DITHB="1",Disable internal dithering function. For 18bit RGB interface, connect two LSB bits of all the R/G/B data buses to GND.
DITHB="0",Enable internal dithering function, For TTL 24bit parallel RGB image data input.

Note 5: Definition of scanning direction.
Refer to the figure as below:

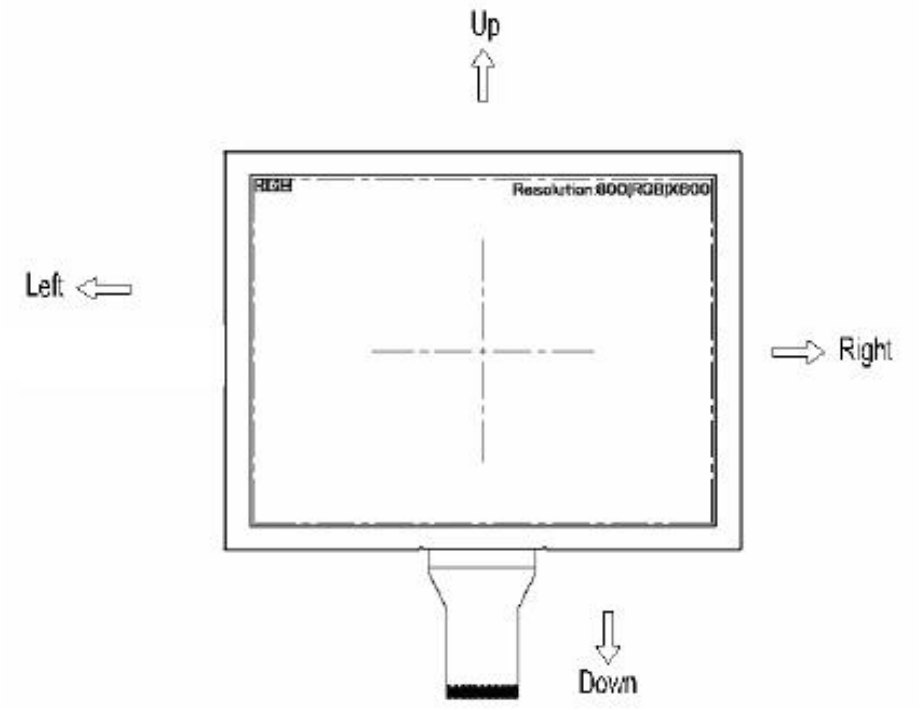

4 Driving TFT LCD Panel

Item	Symbol	MIN	MAX	Unit	Remark
Supply Voltage	V_{DD}	-0.3	5	V	
Operating Temperature	T_{OPR}	-20	70	℃	
Storage Temperature	T_{STG}	-30	80	℃	

5 Electrical Characteristics

5.1 Absolute Maximum Rating

(GND=AV_{SS}=0V, Note 1)

Item	Symbol	Values		Unit	Remark
		Min.	Max.		
Power voltage	V_{CC}	-0.3	5.0	V	
	AV_{DD}	-0.5	13.5	V	
	V_{GH}	13.0	19.0	V	
	V_{GL}	-12.0	-2.0	V	
	V_{GH}-V_{GL}	-	31.0	V	
Operation Temperature	T_{OP}	-20	70	℃	
Storage Temperature	T_{ST}	-30	80	℃	

Note 1: The absolute maximum rating values of this product are not allowed to be exceeded at any times. Should a module be used with any of the absolute maximum ratings exceeded, the characteristics of the module may not be recovered, or in an extreme case, the module may be permanently destroyed.

5.2 Typical Operation Conditions

(GND=AV_{SS}=0V, Note 1)

Item	Symbol	Values			Unit	Remark
		Min.	Typ.	Max.		
Power voltage	V_{CC}	3.0	3.3	3.6	V	Note 2
	AV_{DD}	10.2	10.4	10.6	V	
	V_{GH}	15.3	16.0	16.7	V	
	V_{GL}	-7.7	-7.0	-6.3	V	
Input signal voltage	V_{COM}	2.8	3.8	4.8	V	Note 4
Input logic high voltage	V_{IH}	0.7V_{CC}	-	V_{CC}	V	Note 3
Input logic low voltage	V_{IL}	0	-	0.3V_{CC}	V	

Note 1: Be sure to apply V_{CC} and V_{GL} to the LCD first, and then apply V_{GH}.
Note 2: V_{CC} setting should match the signals output voltage (refer to Note 3) of customer's system board .
Note 3: DCLK,HS,VS,RSTB,UPDN,STLR,MODE,DITHB.
Note 4: Typical V_{COM} is only a reference value, it must be optimized according to each LCM. Be sure to use VR;

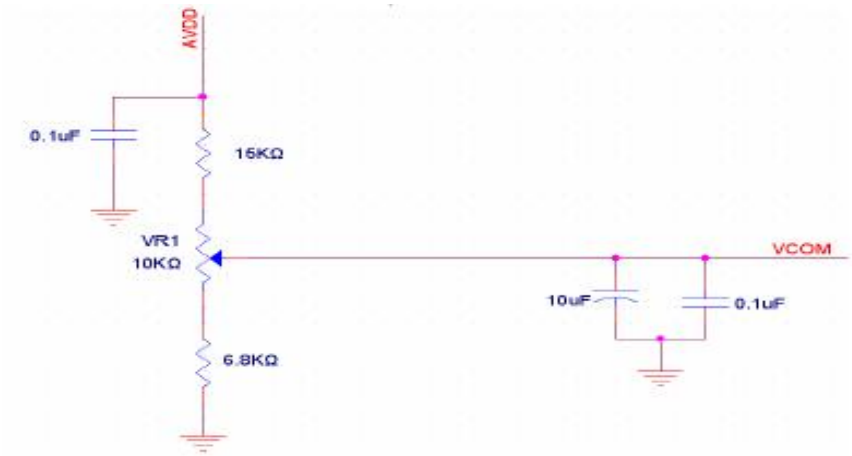

5.3 Current Consumption

(GND=AV_{SS}=0V)

Item	Symbol	Values			Unit	Remark
		Min.	Typ.	Max.		
Current for Driver	I_{GH}	-	0.2	0.5	mA	V_{GH} =16.0V
	I_{GL}	-	0.2	1.0	mA	V_{GL} = -7.0V
	I_{CC}	-	5.5	10.0	mA	V_{CC} =3.3V
	IAV_{DD}	-	32.0	50.0	mA	AV_{DD} =10.4V

5.4 Power sequence

Power on:

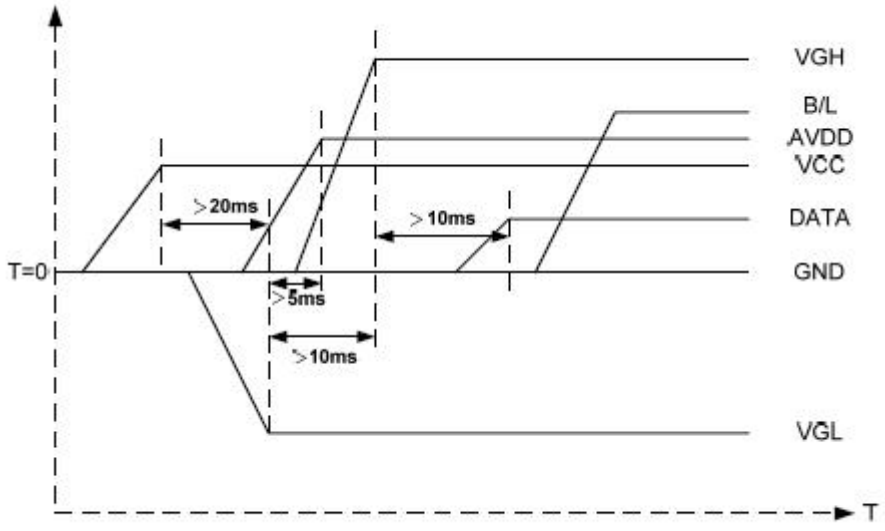

VCC→VGL→VGH→Data→B/L

Power oFF:

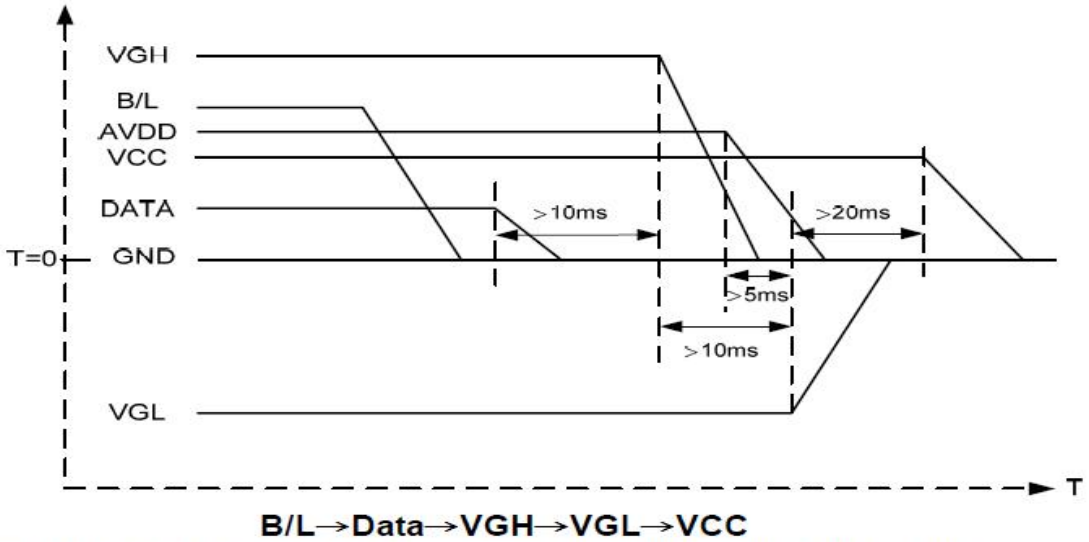

B/L→Data→VGH→VGL→VCC

Note: Data include R0~R5, B0~B5, GO~G5, STLR,UPDN, DCLK, HS,VS,DE.

5.4 Timing Characteristics

5.4.1 AC Electrical Characteristics

Item	Symbol	Values			Unit	Remark
		Min.	Typ.	Max.		
HS setup time	T_{hst}	8	-	-	Ns	
HS hold time	T_{hhd}	8	-	-	Ns	
VS setup time	T_{vst}	8	-	-	Ns	
VS hold time	T_{vhd}	8	-	-	Ns	
Data setup time	T_{dsu}	8	-	-	Ns	
Data hole time	T_{dhd}	8	-	-	Ns	
DE setup time	T_{esu}	8	-	-	Ns	
DE hole time	T_{ehd}	8	-	-	Ns	
VDD Power On Slew rate	T_{POR}	-	-	20	ms	
RSTB pulse width	T_{Rst}	10	-	-	us	
CLKIN cycle time	T_{coh}	20	-	-	Ns	
CLKIN pulse duty	T_{cwh}	40	50	60	%	
Output stable time	T_{sst}	-	-	6	us	

5.4.2 Timing

Item	Symbol	Values			Unit	Remark
		Min.	Typ.	Max.		
Horizontal Display Area	thd	-	800	-	DCLK	
DCLK Frequency	fclk	-	40	50	MHz	
One Horizontal Line	Th	862	1056	1200	DCLK	
HS pulse width	thpw	1	-	40	DCLK	
HS Back Porch(Blanking)	thb	46	46	46	DCLK	
HS Front Porch	thfp	16	210	354	DCLK	

Item	Symbol	Values			Unit	Remark
		Min.	Typ.	Max.		
Vertical Display Area	tvd	-	600	-	TH	
VS period time	tv	624	635	700	TH	
VS pulse width	tvpw	1	-	20	TH	
VS Back Porch(Blanking)	tvb	23	23	23	TH	
VS Front Porch	tvfp	1	12	77	TH	

5.4.3 Timing Diagram

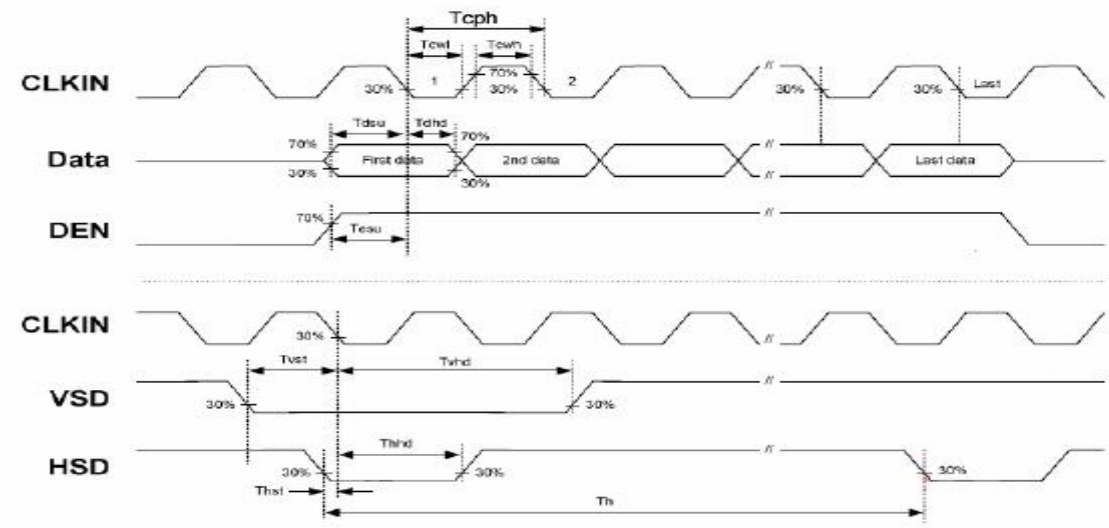

Figure 3.1 Input Clock and Data Timing Diagram

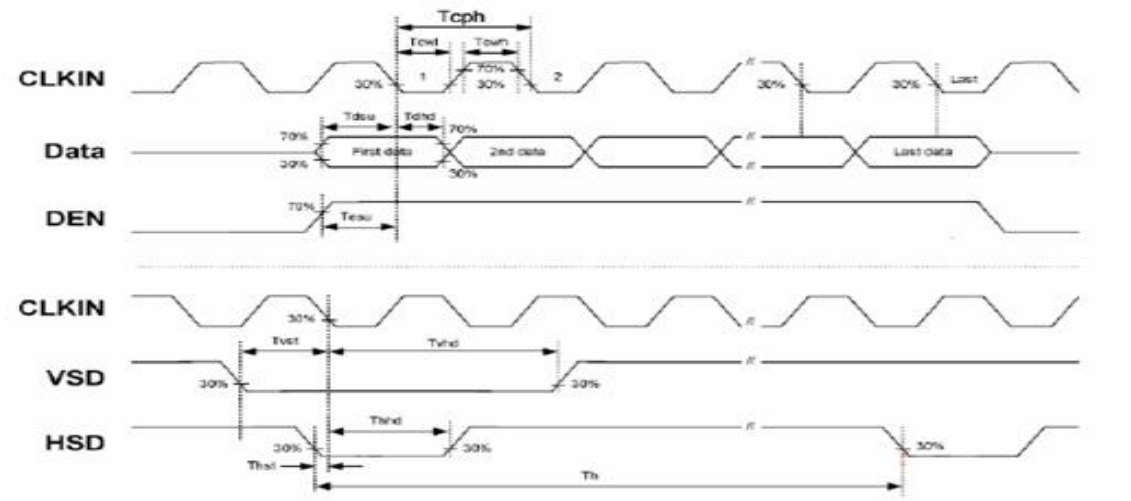

5.4 Driving Backlight

Item	Symbol	MIN	TYP	MAX	Unit	Remark
Forward Current	I_F	-	180	-	mA	
Forward Voltage	V_F	9.3	9.6	9.9	V	
Backlight Power consumption	W_{BL}	-	-	-	W	

Note 1: Each LED : IF =20 mA, VF =3.2V.
Note 2: Optical performance should be evaluated at Ta=25℃ only.
Note 3: If LED is driven by high current, high ambient temperature & humidity condition. The life time of LED will be reduced.Operating life means brightness goes down to 50% initial brightness. Typical operating life time is estimated data.

6 Optical Characteristics

Items	Symbol	Condition	Min.	Typ.	Max.	Unit	Remark
Viewing angles	θ_T	Center CR≥10	45	50	-	Degree.	Note2
	θ_B		60	70	-		
	θ_L		60	70	-		
	θ_R		60	70	-		
Contrast Ratio	CR	Θ =0	-	400	450	-	Note1, Note3
Response Time	T_{ON}	25° C	-	10	20	ms	Note1, Note4
	T_{OFF}		-	15	30		
Chromaticity	X_W	Backlight is on	0.26	0.31	0.36	-	Note1, Note5
	Y_W		0.28	0.33	0.38	-	
Uniformity	U		-	70	-	%	Note1, Note6
Luminance	L		-	350			Note1, Note7

Test Conditions:

1. IF= 30mA(one channel),the ambient temperature is 25.
2. The test systems refer to Note 1 and Note 2.

Note 1:Definition of optical measurement system.

The optical characteristics should be measured in dark room. After 5 minutes operation, the optical properties are measured at the center point of the LCD screen. All input terminals LCD panel must be ground when measuring the center area of the panel.

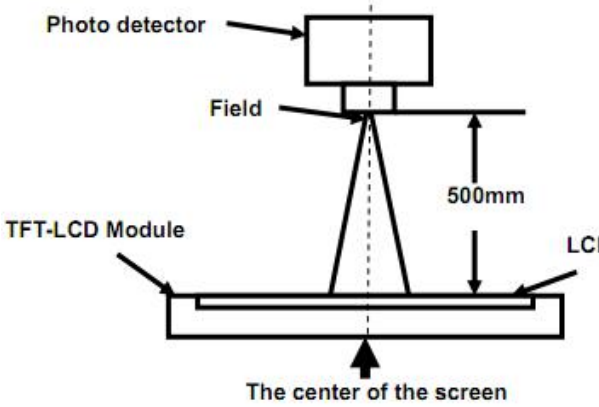

Item	Photo detector	Field
Contrast Ratio	SR-3A	1°
Luminance		
Chromaticity		
Lum Uniformity		
Response Time	BM-7A	2°

Note 2: Definition of viewing angle range and measurement system.
viewing angle is measured at the center point of the LCD by CONOSCOPE(ergo-80).

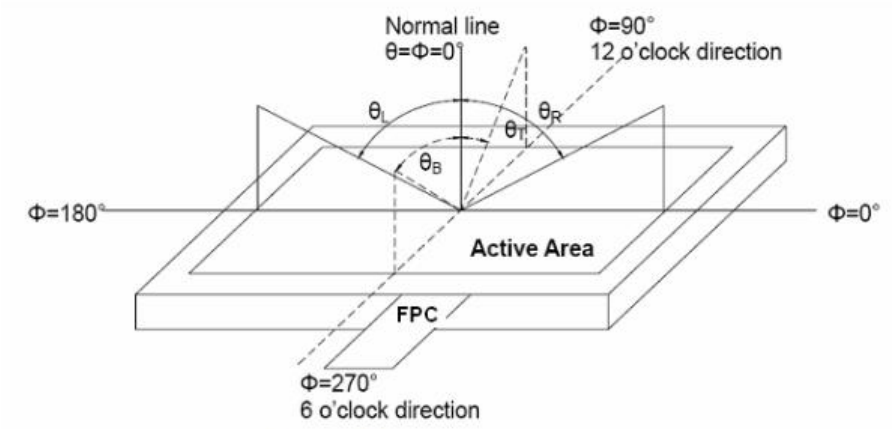

Fig. 1 Definition of viewing angle

Note 3: Definition of contrast ratio

$$\text{Contrast ratio (CR)} = \frac{\text{Luminance measured when LCD is on the "White" state}}{\text{Luminance measured when LCD is on the "Black" state}}$$

Note 4: Definition of Response time
The response time is defined as the LCD optical switching time interval between “White” state and “Black” state. Rise time (TON) is the time between photo detector output intensity changed from 90% to 10%. And fall time (TOFF) is the time between photo detector output intensity changed from 10% to 90%.

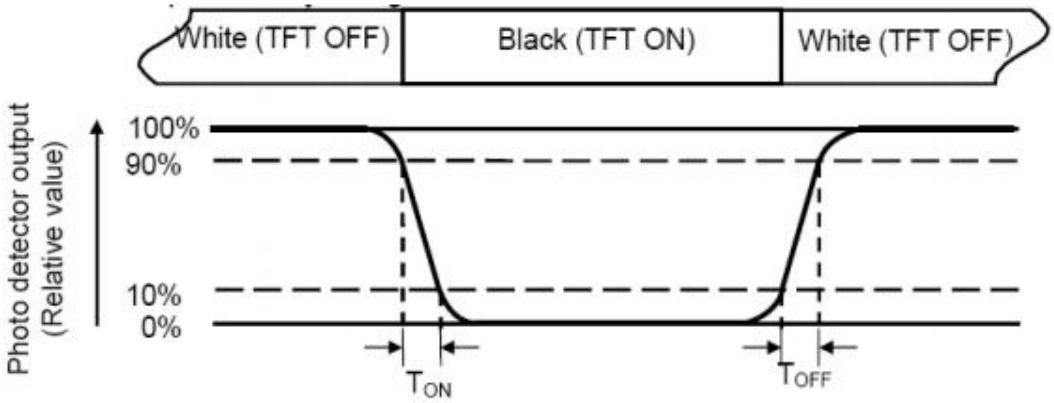

Note 5: Definition of color chromaticity (CIE1931)
Color coordinates measured at center point of LCD.
Note 6: Definition of Luminance Uniformity
Active area is divided into 9 measuring areas (Refer Fig. 2). Every measuring point is placed at the center of each measuring area.
Luminance Uniformity(U) = Lmin/ Lmax
L-------Active area length W----- Active area width

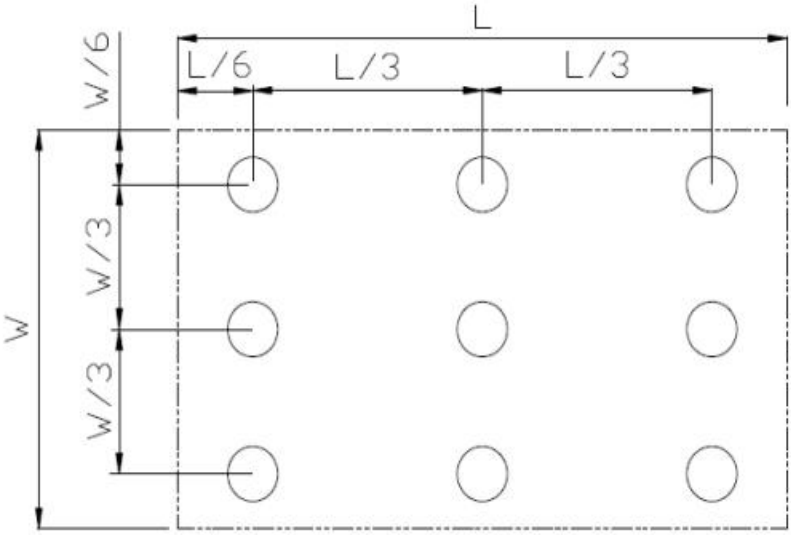

Fig. 2 Definition of uniformity
Lmax: The measured maximum luminance of all measurement position.
Lmin: The measured minimum luminance of all measurement position.
Note 7: Definition of Luminance :
Measure the luminance of white state at center point.

7 Environmental / Reliability Tests

No	Test Item	Condition	Remarks
1	High Temperature Opeartion	Ts= +70℃, 240hrs	Note 1 IEC60068-2-2, GB2423. 2-89
2	Low Temperature Opeartion	Ta= -20℃, 240hrs	Note 2 IEC60068-2-1 GB2423.1-89
3	High Temperature Storage	Ta= +80℃, 240hrs	IEC60068-2-2 GB2423. 2-89
4	Low Temperature Storage	Ta= -30℃, 240hrs	IEC60068-2-1 GB/T2423.1-89
5	High Temperature & Humidity Storage	Ta= +60℃, 90% RH max, 160 hours	IEC60068-2-3 GB/T2423.3-2006
6	Thermal Shock (Non-operation)	-30℃ 30 min ~ +80℃ 30 min Change time: 5min, 30 Cycle	Start with cold temperature,end with high temperature IEC60068-2-14, GB2423.22-87
7	Electro Static Discharge (Opeartion)	C=150pF, R=330 Ω, 5 points/panel Air:±8KV, 5 times; Contact: ±4KV, 5 times; (Environment: 15℃ ~ 35℃, 30% ~ 60%, 86Kpa ~ 106Kpa)	IEC61000-4-2 GB/T17626.2-1998
8	Vibration (Non-operation)	Frequency range: 10~55Hz, Stroke: 1.mm Sweep: 10Hz~55Hz~10Hz 2 hours for each direction of X .Y. Z. (package condition)	IEC60068-2-6 GB/T2423.5-1995
9	Shock (Non-operation)	60G 6ms, ± X, ±Y , ± Z 3 times for each direction	IEC60068-2-27 GB/T2423.5-1995
10	Package Drop Test	Height: 80 cm, 1 corner, 3 edges, 6 surfaces	IEC60068-2-32 GB/T2423.8-1995

Note: 1. T_S is the temperature of panel's surface.
2. Ta is the ambient temperature of sample.

深圳市勋瑞光电科技有限公司

Xunrui photoelectric technology （shenzhen）CO,.LTD.

8 Mechanical Drawing

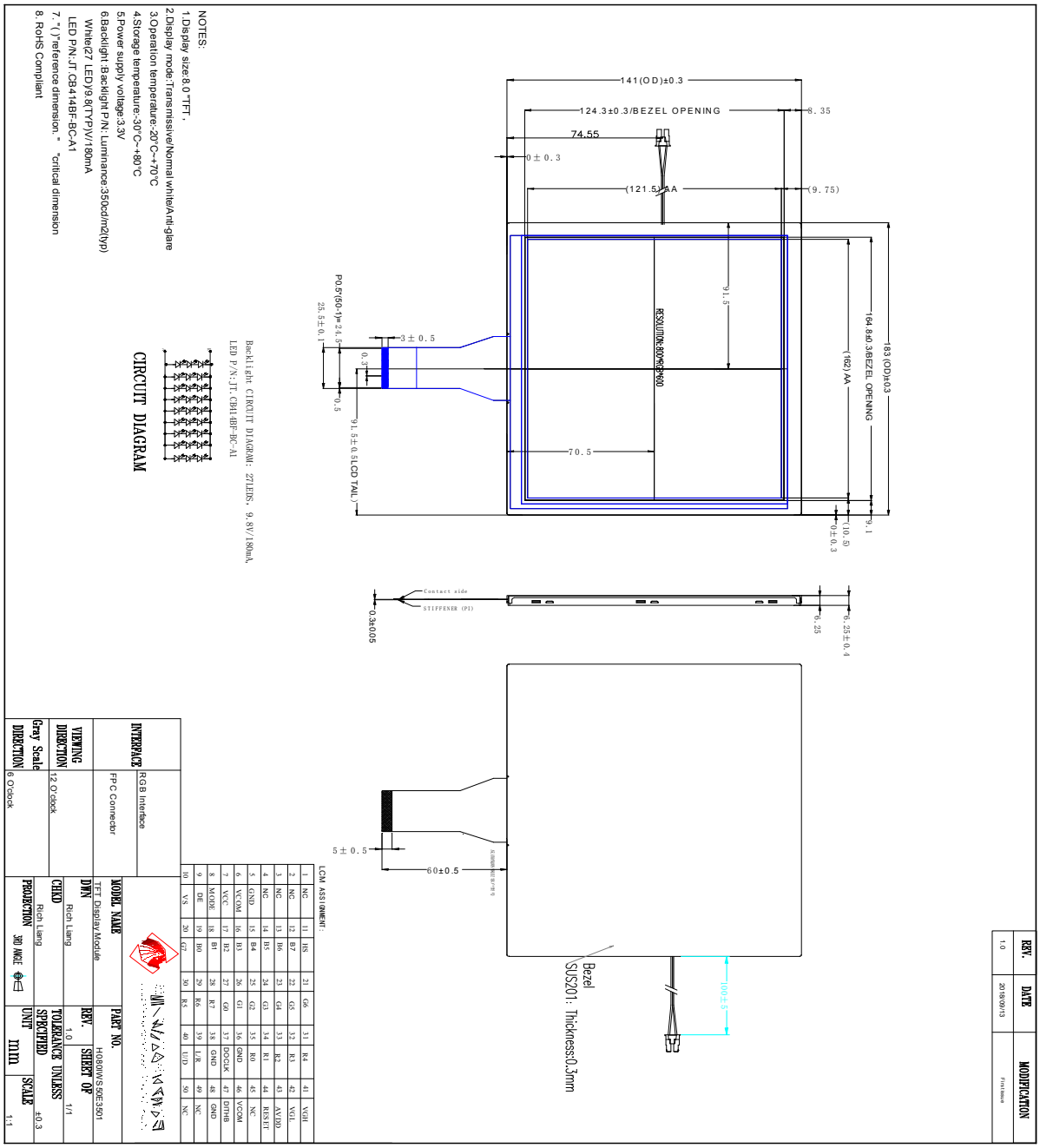

9 Packing

TBD

10. Precautions For Use of LCD modules

10.1 Handling Precautions

10.1.1. The display panel is made of glass. Do not subject it to a mechanical shock by dropping it from a high place, etc.

10.1.2. If the display panel is damaged and the liquid crystal substance inside it leaks out, be sure not to get any in your mouth, if the substance comes into contact with your skin or clothes, promptly wash it off using soap and water.

10.1.3. Do not apply excessive force to the display surface or the adjoining areas since this may cause the color tone to vary.

10.1.4. The polarizer covering the display surface of the LCD module is soft and easily scratched. Handle this polarizer carefully.

10.1.5. If the display surface is contaminated, breathe on the surface and gently wipe it with a soft dry cloth. If still not completely clear, moisten cloth with one of the following solvents:

- Isopropyl alcohol
- Ethyl alcohol

Solvents other than those mentioned above may damage the polarizer. Especially, do not use the following:

- Water
- Ketone
- Aromatic solvents

10.1.6. Do not attempt to disassemble the LCD Module.

10.1.7. If the logic circuit power is off, do not apply the input signals.

10.1.8. To prevent destruction of the elements by static electricity, be careful to maintain an optimum work environment.

10.1.8.1. Be sure to ground the body when handling the LCD Modules.

10.1.8.2. Tools required for assembly, such as soldering irons, must be properly ground.

10.1.8.3. To reduce the amount of static electricity generated, do not conduct assembly and other work under dry conditions.

10.1.8.4. The LCD Module is coated with a film to protect the display surface. Be care when peeling off this protective film since static electricity may be generated.

10.2 Storage Precautions

10.2.1. When storing the LCD modules, avoid exposure to direct sunlight or to the light of fluorescent lamps.

10.2.2. The LCD modules should be stored under the storage temperature range If the LCD modules will be stored for a long time, the recommend condition is:

Temperature : 0℃ ～ 40℃ Relatively humidity: ≤80%

10.2.3. The LCD modules should be stored in the room without acid, alkali and harmful gas.

10.3 Transportation Precautions

The LCD modules should be no falling and violent shocking during transportation, and also should avoid excessive press, water, damp and sunshine.