深圳市勋瑞光电科技有限公司
Xunrui photoelectric technology （shenzhen） CO,.LTD.

Product Specifications

Customer: _____

Model Name: H070BWS40I3570

Date: 2023-08-22

Version: A0

■ **Preliminary Specification**

☐ **Final Specification**

For Customer's Acceptance

Approved by	Comment

Approved by	Reviewed by	Prepared by

Contents

Record of Revision 3
1. GENERAL DESCRIPTION 4
2. MECHANICAL SPECIFICATION 5
3. PIN DESCRIPTION 6
4. ELECTRICAL CHARACTERISTICS 8
5.INPUT SIGNAL TIMING 12
6. OPTICAL CHARACTERISTICS 16
7.RELIABILITY TEST ITEMS 19
8. GENERAL PRECAUTION 20
9. PACKAGE DRAWING 21

Record of Revision

Rev	Issued Date	Description	Editor
A0	2023/08/22	First Release.	

1. General Description

1.1 Description

H070BWS40I3570 is a color active matrix thin film transistor (TFT) TN liquid crystal display (LCD) that uses amorphous silicon TFT as a switching device. It is composed of a TFT LCD panel, Driver IC ,FPC and Backlight.

1.2 Features:

No.	Item	Specification	Unit
1	Panel Size	7”	inch
2	Number of Pixels	1024×RGB (3) ×600	pixels
3	Active Area	154.21(H)x85.92(V)	mm
4	Pixel Pitch	0.1506(H)×0.1432(V)	mm
5	Outline Dimension	164.9 (W)×100(H)×5.6(D)	mm
6	Number of Colors	16.7M	-
7	Display Mode	Normally Black	-
8	Viewing Direction	ALL	-
9	Display Format	RGB vertical stripe	-
10	Luminance (cd/m^2)	350(TYP.)	nit
11	Contrast Ratio	800(TYP.)	
12	Surface Treatment	Anti-Glare	-
13	Interface	LVDS	-
14	Backlight	White LED	-
15	Operation Temperature	-20~70	℃
16	Storage Temperature	-30~80	℃

2. Mechanical Specification

REV.	DATE	MODIFICATION
A0	2023.08.22	First issue

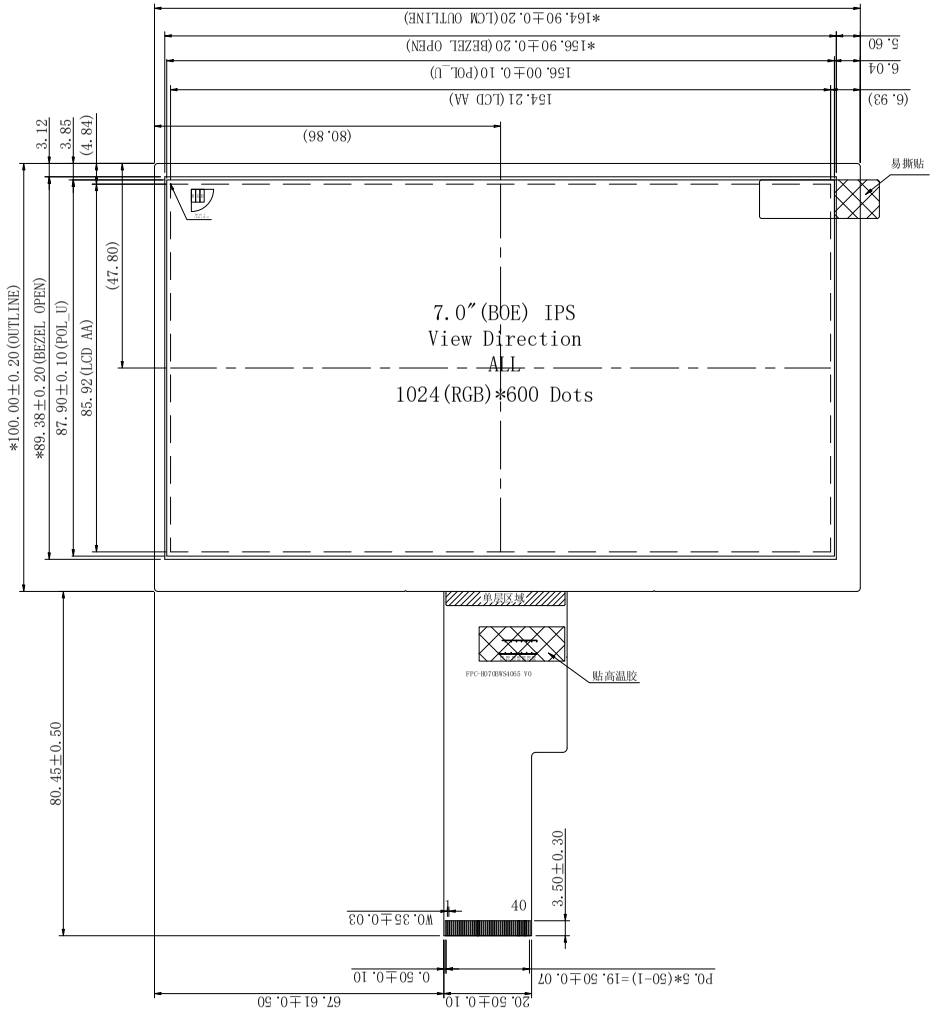

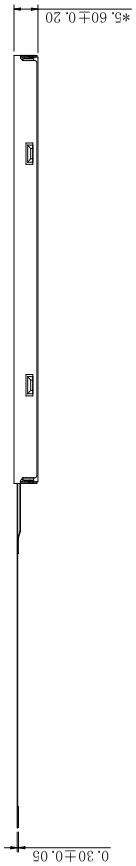

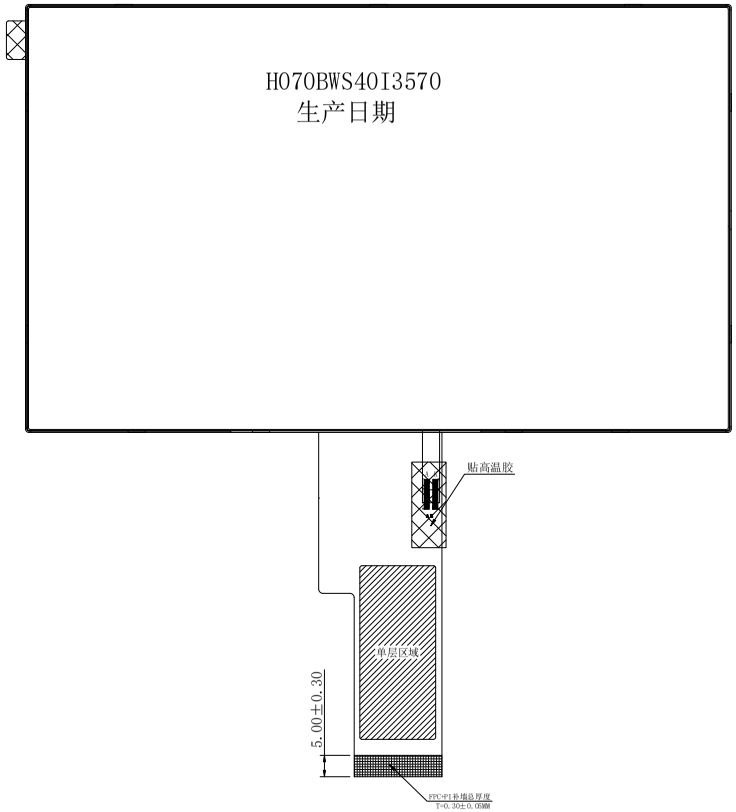

PIN	ASSIGNMENT
1	VCOM
2	VDD
3	VDD
4	NC
5	REST
6	STBYB
7	GND
8	RXIN0-
9	RXIN0+
10	GND
11	RXIN1-
12	RXIN1+
13	GND
14	RXIN2-
15	RXIN2+
16	GND
17	RXCLKIN-
18	RXCLKIN+
19	GND
20	RXIN3-
21	RXIN3+
22	GND
23	NC
24	NC
25	GND
26	NC
27	NC
28	SELB
29	AVDD
30	GND
31	LED-
32	LED-
33	L/R
34	U/D
35	VGL
36	NC
37	NC
38	VGH
39	LED+
40	LED+

NOTES:
1. DISPLAY TYPE: 7.0 INCH TFT /Normally White Transmissive
2. BACKLIGHT: 27 CHIP WHITE LED, IN PARALLEL
3. OPERATING TEMP: -20° C~+70° C
4. STORAGE TEMP: -30° c~+80° c
5. RESOLUTION: 1024RGBx600
6. LCD IC: TBD
7. Typical Lumiance:300cd/m2(MIN),350cd/m2(TYP)
8. "( )"reference dimension. " * "critical dimension
9. RoHS Compliant

电路图:

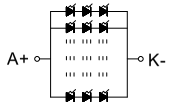

27颗灯 3串9并

BACKLIGHT CIRCUIT DIAGRAM:
(If=180mA , VF=8.4V~10.2V)

INTERFACE	LVDS Interface	深圳市勋瑞光电科技有限公司 Xunrui photoelectric technology (shenzhen) CO.,LTD.		
	FPC Connector	MODEL NAME TFT Display Module	PART NO. H070BWS40I3570	
VIEWING DIRECTION	ALL	DWN	REV. A0	SHEET OF 1/1
		CHKD	TOLERANCE UNLESS SPECIFIED ±0.3	
Gray Scale DIRECTION	FREE	PROJECTION 3RD ANGLE	UNIT mm	SCALE 1:1

3. PIN DESCRIPTION

FH19SC-40S-0.5SH (05)

Pin No.	Symbol	Type	Function
1	VCOM	P	Common voltage
2	VDD	P	Digital power
3	VDD	P	Digital power
4	NC	-	Not connect
5	REST	I	Global reset pin. Active low to enter reset state. Suggest to connecting with an RC reset circuit for stability.Normally pull high. (R=10KΩ，C=0.1μF)
6	STBYB	I	Standby mode, normally pull high STBYB=”1”, normal operation STBYB=”0”,timing control, source driver will turn off, all output are high-Z
7	GND	P	Ground
8	RXIN0-	I	Negative LVDS differential data inputs
9	RXIN0+	I	Positive LVDS differential data inputs
10	GND	P	Ground
11	RXIN1-	I	Negative LVDS differential data inputs
12	RXIN1+	I	Positive LVDS differential data inputs
13	GND	P	Ground
14	RXIN2-	I	Negative LVDS differential data inputs
15	RXIN2+	I	Positive LVDS differential data inputs
16	GND	P	Ground
17	RXCLKIN-	I	Negative LVDS differential clock inputs
18	RXCLKIN+	I	Positive LVDS differential clock inputs
19	GND	P	Ground
20	RXIN3-	I	Negative LVDS differential data inputs
21	RXIN3+	I	Positive LVDS differential data inputs
22	GND	P	Ground
23	NC	-	Not connect
24	NC	-	Not connect
25	GND	P	Ground
26	NC	-	Not connect
27	DIMO/NC	O	Backlight CABC controller signal output
28	SELB	I	6bit/8bit mode select H : 6bit / L : 8bit
29	AVDD	P	Power for Analog Circuit

30	GND	P	Ground
31	LED-	P	LED Cathode
32	LED-	P	LED Cathode
33	L/R	I	Horizontal inversion
34	U/D	I	Vertical inversion
35	VGL	P	Negative power for TFT
36	CABCEN1/NC	P	Backlight control signal Note 2
37	CABCEN0/NC	P	Backlight control signal Note 2
38	VGH	P	Positive power for TFT
39	LED+	P	LED Anode
40	LED+	P	LED Anode

I：input , O：output , P：Power

【Note】

*1)：When L/R="0" , set right to left scan dirction
When L/R="1" , set left to right scan dirction
When U/D="0" , set top to bottom scan dirction
When U/D="1" , set bottom to top scan dirction

Note 2: CABC H/W enable pin,Normally pull low.
When CABC_EN=00,CABC OFF .(Default mode)
When CABC_EN=01, Use interface image.
When CABC_EN=10, Still Picture.
When CABC_EN=11, Moving image\

4. Electrical Characteristics

4.1 Absolute Maximum Ratings

Item	Symbol	Min.	Max.	Unit	Conditions
Digital Supply Voltage	VDD	-0.3	4.1	V	
TFT Gate on voltage	VGH	-0.3	40	V	
TFT Gate off voltage	VGL	-20	0.3	V	
Analog power supply voltage	AVDD	-0.5	15	V	

4.2 TFT LCD Module

4.2.1 Operating Conditions

Parameter	Symbol	Min.	Typ.	Max.	Unit	Conditions
Digital Supply Voltage	VDD	3.0	3.3	3.6	V	
TFT Gate on voltage	VGH	17	18	19	V	
TFT Gate off voltage	VGL	-7	-6	-5	V	
TFT Common electrode voltage	VCOM	3.2	3.4	3.6	V	
Analog power supply voltage	AVDD	6.5	9.6	13.5	V	

4.3 Current Consumption

Item	Symbol	Condition	Values			Unit	Remark
			Min.	Typ.	Max.		
Gate on power Current	IVGH	VGH =18 V	-	0.5	1	mA	
Gate off power current	IVGL	VGL= -6V	-	1	2	mA	
Digital power current	IVDD	VDD = 3.3V	-	30	45	mA	
Analog power current	IAVDD	AVDD =9.6V	-	35	45	mA	

4.4 POWER ON/OFF SEQUENCE

To prevent the device damage from latch up, the power on/off sequence shown below must be followed.

Power on: VDD, GND → AVDD, AGND → V1 to V14

Power off: V1 to V14 → AVDD, AGND→ VDD, GND

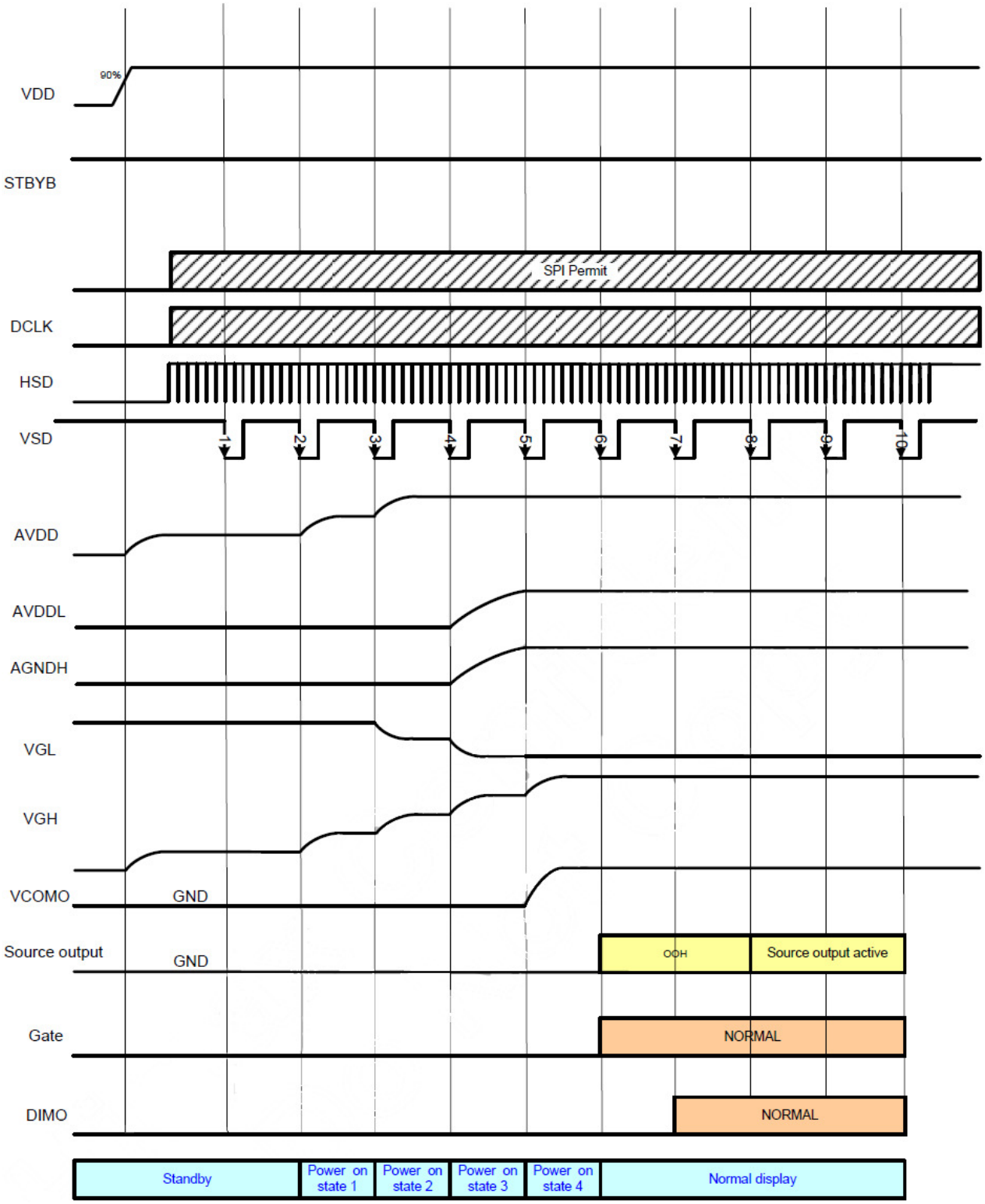

Power on timing sequence

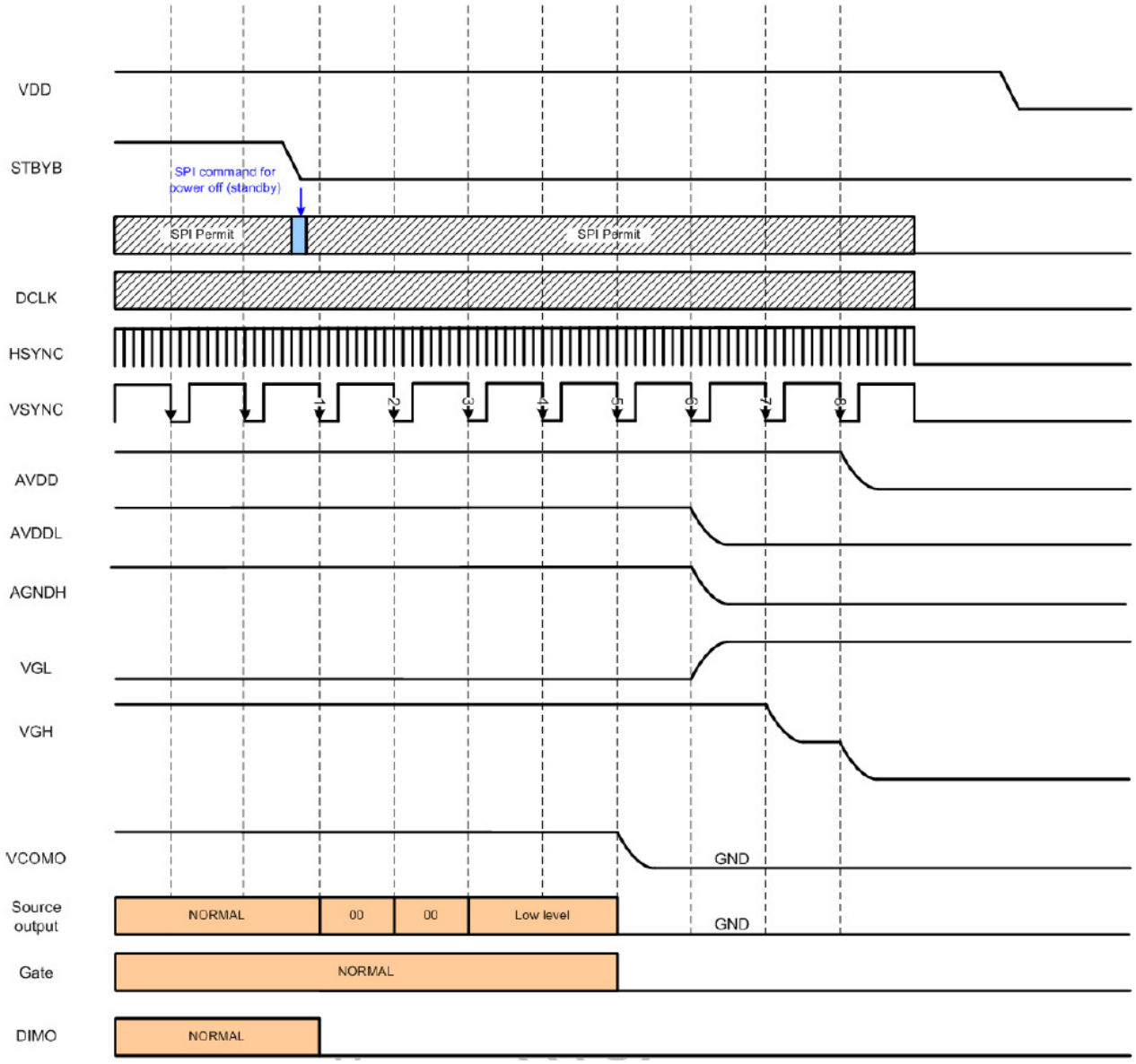

Power off timing sequence

Note: Low level=3FH, when NBW=L (Normally white)
Low level=00H, when NBW=H (Normally black

4.5 Back Light Unit

Ta=25℃

Item	Symbol	Min.	Typ.	Max.	Unit	Remark
LED current	ILED	-	180	-	mA	27LEDS
Forward voltage	VF	8.4	9.0	10.2	V	IF=180mA 27LEDS
Reverse current	IR	-	-	50	μA	VR=3V,1LED
Power dissipation	Pd	1620			mW	27LEDS
Peak forward current	IFP	20			mA	1LED
Reverse Voltage	VR	3			V	1LED

4.5.1Internal Circuit Diagram

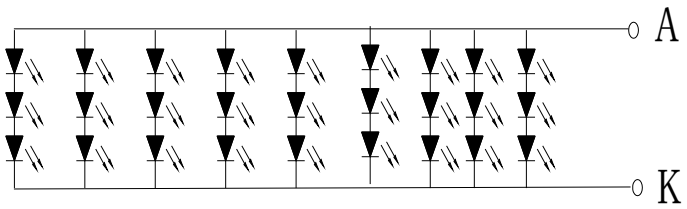

3X9=27LED 9.0V 20mAX9=180mA

5.INPUT SIGNAL TIMING

5.1AC ELECTRICAL CHARACTERISTICS

5.1. 1. LVDS mode AC electrical characteristics

Parameter	Symbol	Min	Typ	Max	Unit	Condition
Clock frequency	RxFCLK	40.8	51.2	67.2	MHz	
Input data skew margin	TRSKM	500	-	-	ps	|VID|=400mV RxVCM=1.2V RxFCLK=51.2MHz
Clock high time	TLVCH	-	4/ (7*RxFCLK)		ns	
Clock low time	TLVCL		3/ (7*RxFCLK)		ns	
PLL wake-up time	TenPLL			150	us	

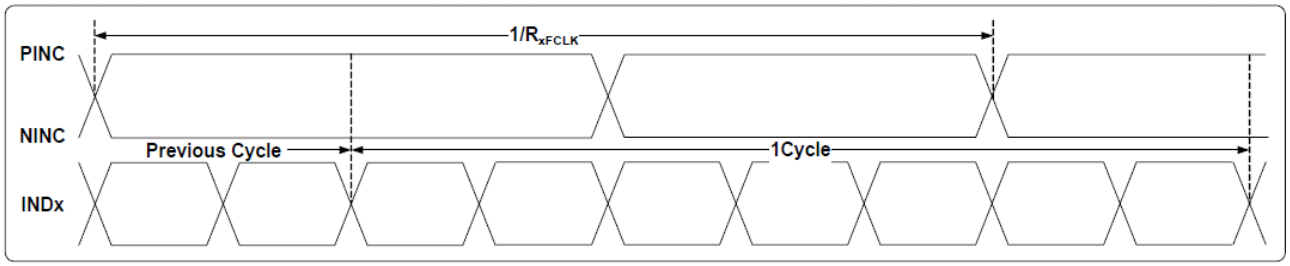

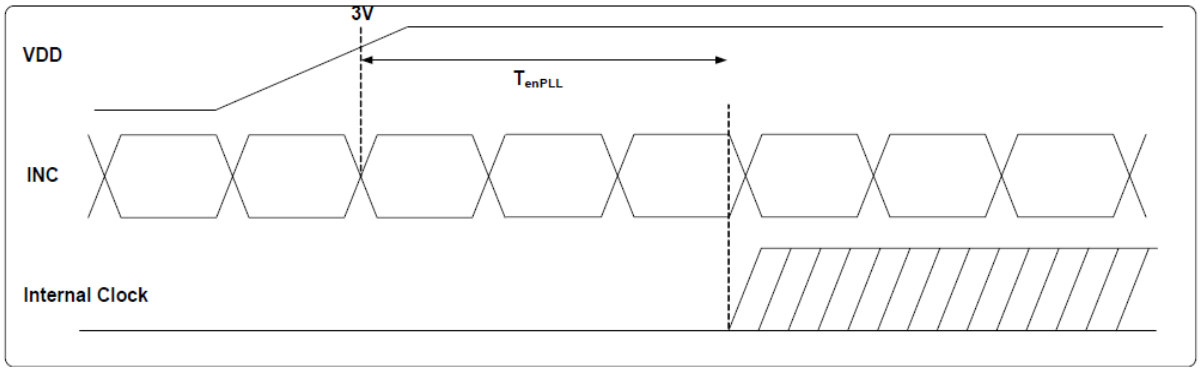

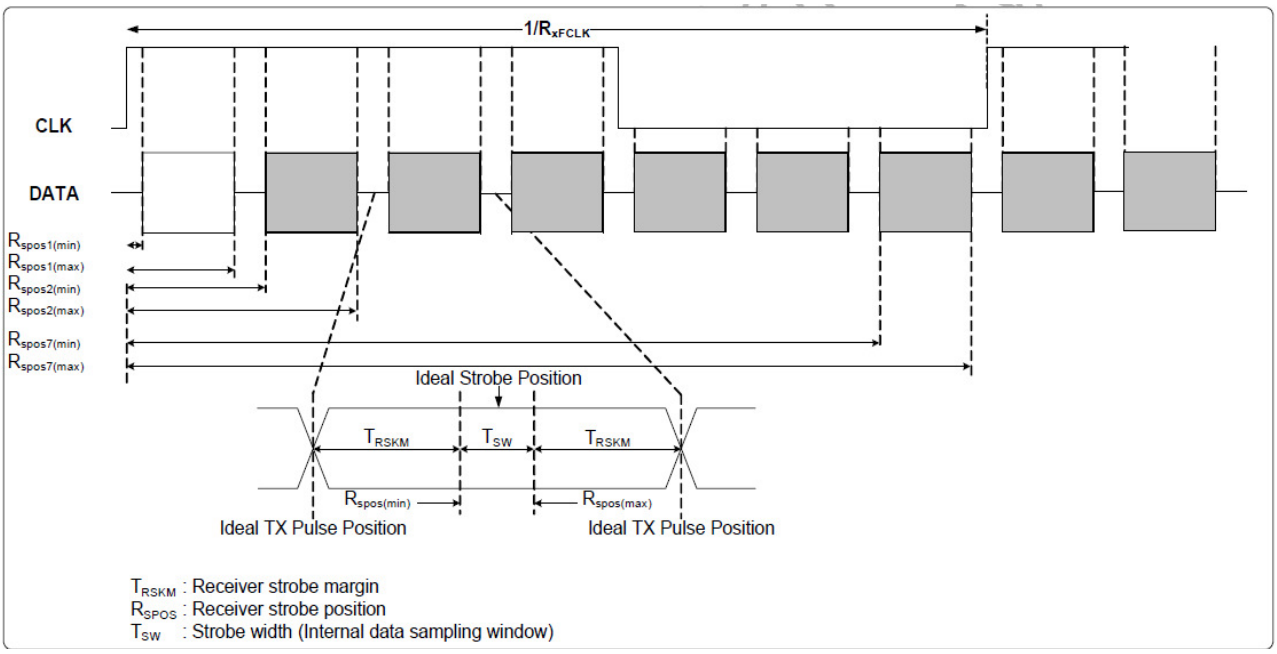

LVDS figure

5.2 DATA INPUT FORMAT

LVDS mode data input format

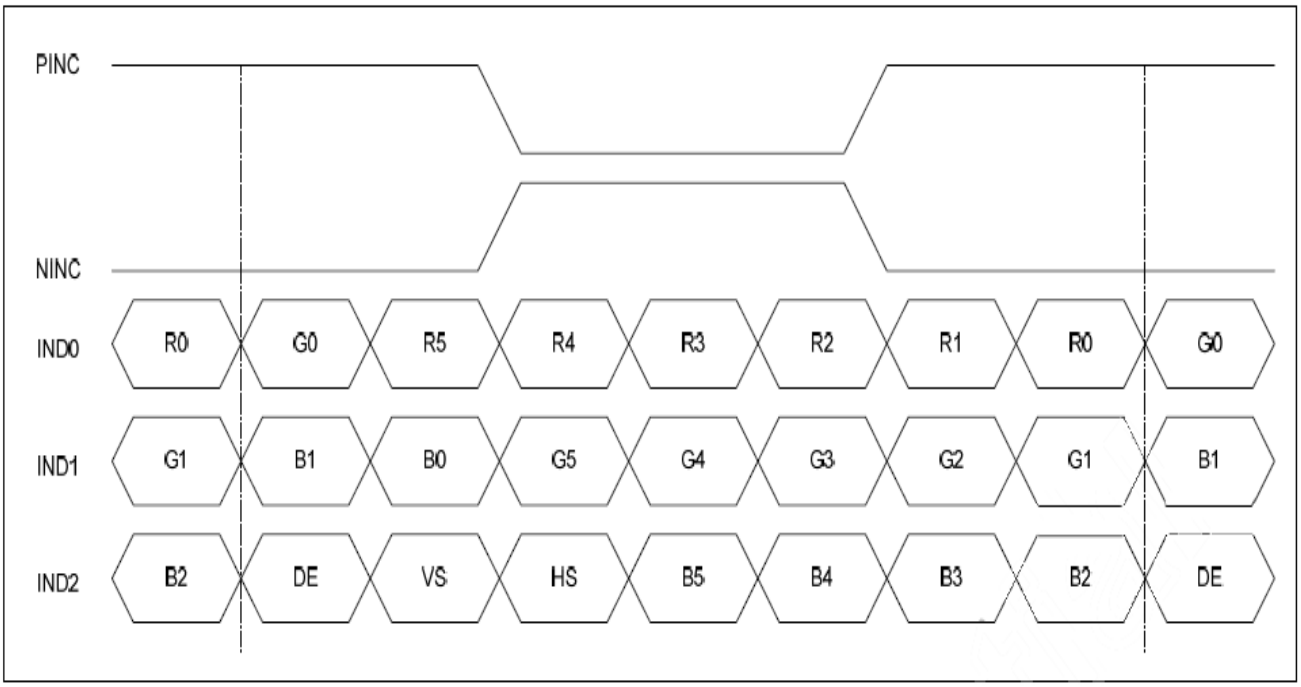

6-bit LVDS input

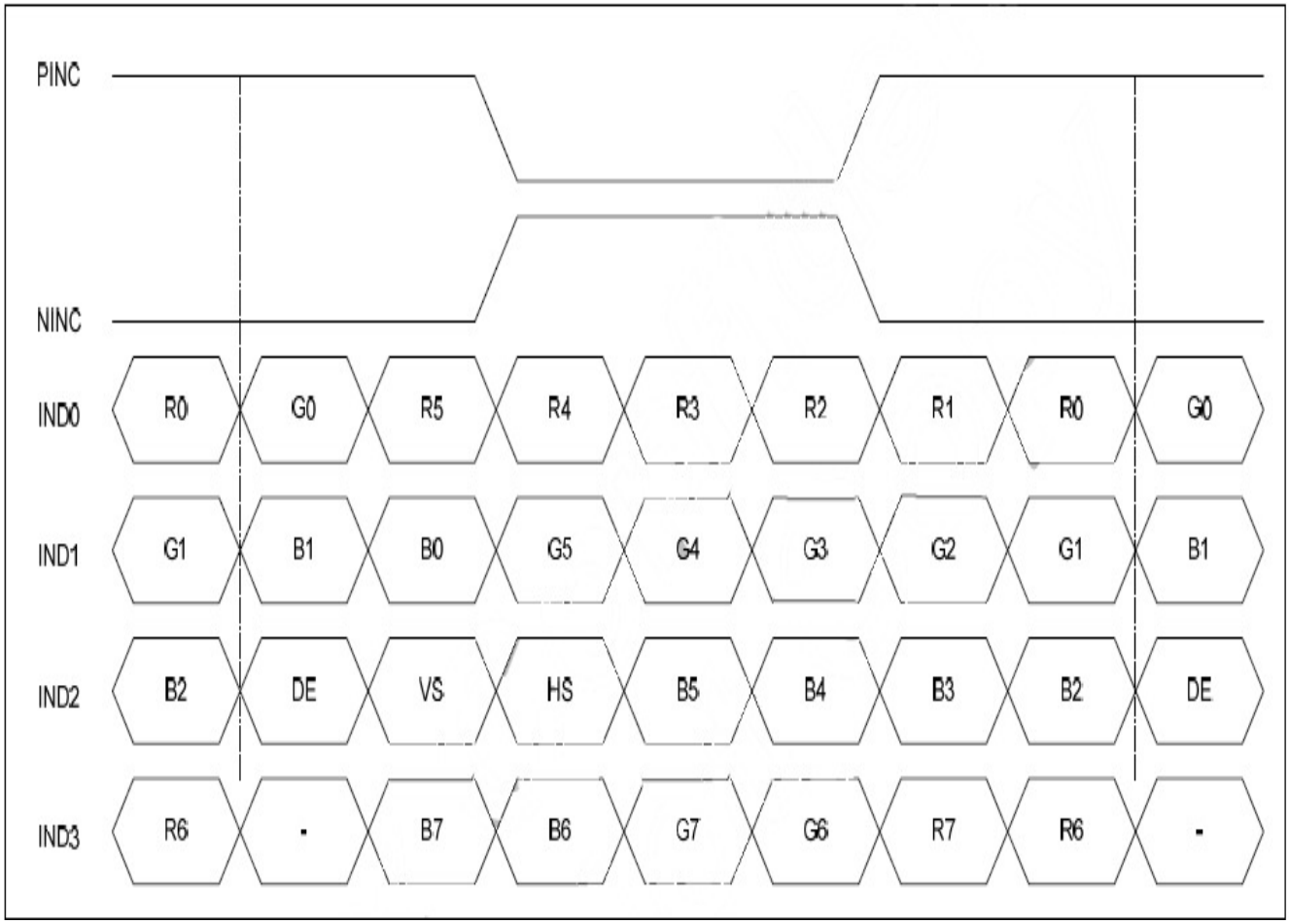

8-bit LVDS Input

5.3 POWER SEQUENCE

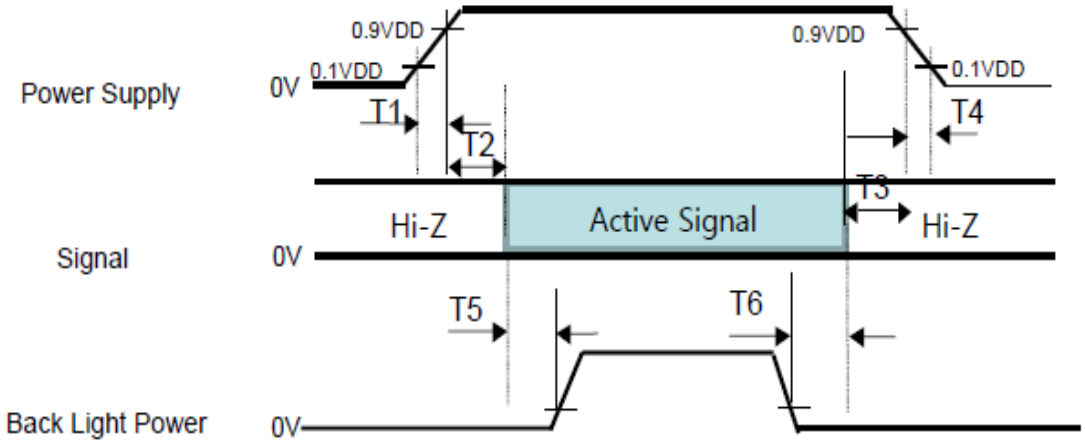

- 0.5ms ≤ T1 ≤ 10 ms
- 10 ms ≤ T2
- 10 ms ≤ T3
- 0 ms ≤ T4 ≤ 10ms
- 100ms ≤ T5
- 100 ms ≤ T6

Notes:

1. When the power supply VDD is 0V, keep the level of input signals on the low or keep high impedance.
2. Do not keep the interface signal high impedance when power is on. Back Light must be turn on after power for logic and interface signal are valid.

6. Optical Characteristics

Ta=25℃±2

Item		Symbol	Condition	Min.	Typ.	Max.	Unit	Note
Contrast Ratio		CR	Θ = 0°	600	800	-		Note1 Note4
Luminance		YL		300	350	-	cd/m2	Note1 Note6 Note7
Luminance Uniformity		IV-M		80	85		%	
Response Time (Rising + Falling)		T_{RT}	Ta= 25℃ Θ = 0°	-	25	40	ms	Note1 Note3
Viewing Angle range	Left	Θ	CR > 10	80	85	-	degree	Note2
	Right	Θ		80	85	-	degree	
	Up	Φ		80	85	-	degree	
	Down	Φ		80	85	-	degree	
Color Chromaticity (CIE1931)	White	x		0.249	0.279	0.309		Note1 Note5 Note7
		y		0.275	0.305	0.335		
	Red	x		0.585	0.615	0.645		
		y		0.290	0.320	0.350		
	Green	x		0.266	0.296	0.326		
		y		0.539	0.569	0.599		
	Blue	x		0.112	0.142	0.172		
		y		0.144	0.174	0.204		
NTSC				45	50		%	

Note1: Definition of optical measurement system

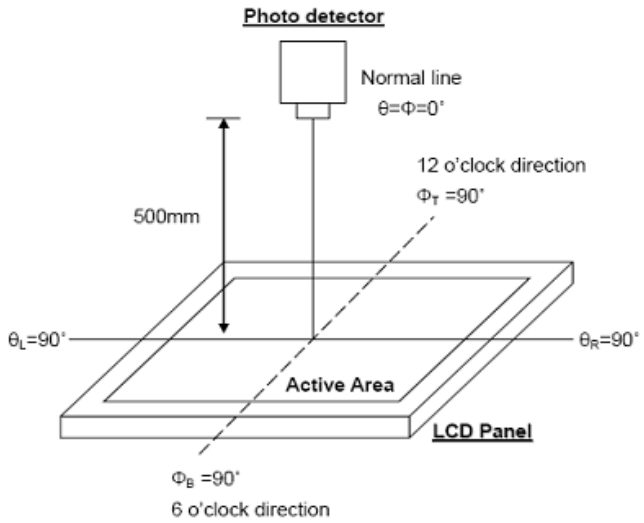

Note2: Definition of viewing angle range and measurement system

Viewing angle is measured at the center point of the LCD by CONOSCOPE (ergo-80).

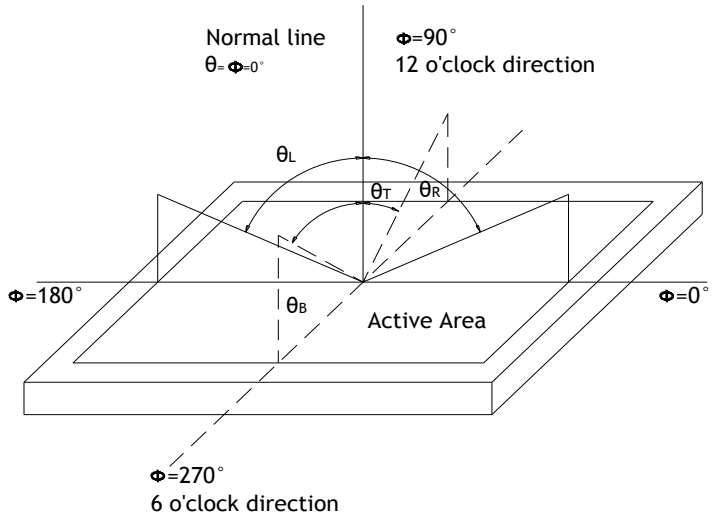

Note3: Definition of Response time

The response time is defined as the LCD optical switching time interval between "White" state and "Black" state. Rise time (TON) is the time between photo detector output intensity changed from 10% to 90%. And fall time (TOFF) is the time between photo detector output intensity changed from 90% to 10%.

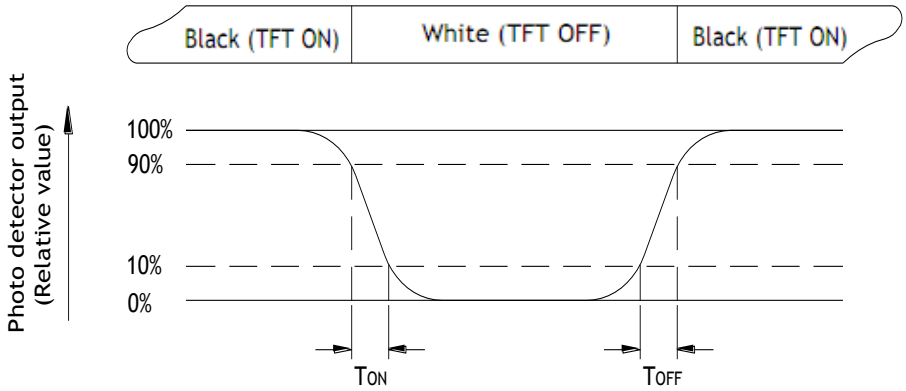

Fig. 6-3 Definition of response time

Note4: Definition of contrast ratio

$$\text{Contrast ratio(CR)}=\frac{\text{Luminance measured when LCD on the Whitestate}}{\text{Luminance measured when LCD on the Blackstate}}$$

"White state ": The state is that the LCD should drive by Vwhite.
"Black state": The state is that the LCD should drive by Vblack.
Vwhite: To be determined Vblack: To be determined.

Note5: Definition of color chromaticity (CIE1931)
Color coordinates measured at center point of LCD.

Note6: All input terminals LCD panel must be ground while measuring the center area of the panel. The LED driving condition is IL=180mA.

Note7: Definition of Luminance Uniformity
Active area is divided into 9 measuring areas.Every measuring point is placed at the center of each measuring area.

Luminance Uniformity (U) = Lmin/ Lmax

L----Active area length, W---- Active area width

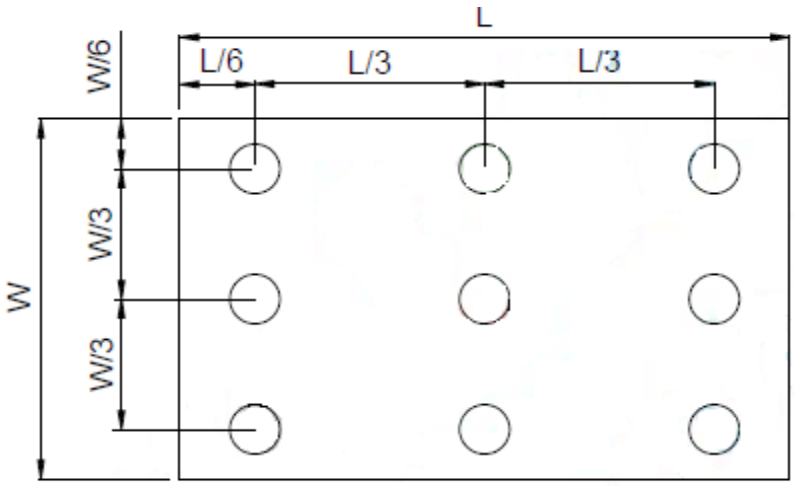

Bmax: The measured maximum luminance of all measurement position.
Bmin: The measured minimum luminance of all measurement position.

7.RELIABILITY TEST ITEMS

7.1 TEMPERATURE AND HUMIDITY

Test Item	Test Condition	Remark
High Temperature Storage	Ta=80℃; 48hrs	IEC60068-2-1：2007 GB2423.2-2008
Low Temperature Storage	Ta=-30℃; 48hrs	IEC60068-2-1：2007 GB2423.1-2008
High Temperature Operation	Ta=70℃; 48Hrs	IEC60068-2-1：2007 GB2423.2-2008
Low Temperature Operation	Ta=-20℃; 48hrs	IEC60068-2-1：2007 GB2423.1-2008
High Temperature High Humidity Operation	Ta=60℃，90%RH， 48Hrs(no condensation)	IEC60068-2-78：2001 GB/T2423.3-2006
Thermal Shock	-20℃(0.5h) ~ 70℃(0.5h) / 10 cycles	Start with cold temperature， End with high temperature， IEC60068-2-14:1984,GB2423.22-2002
Image Sticking	25℃ ; 4hrs	Note1

Note1:Condition of image sticking test :25℃±2℃
Operation with test pattern sustained for 2hrs,then change to gray pattern immediately.after5 mins,themura must be disappeared completely

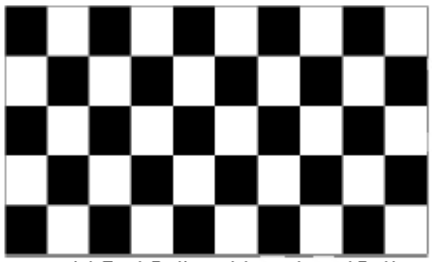
(a) Test Pattern (chess board Pattern)

(b) Gray Pattern

7.2 VIBRATION&SHOCK

Test item	Conditions	Remark
Packing Shock (non-operation)	980m/s2,6ms, ±x,y,z 3times for direction	IEC60068-2-27：1987 GB/T2423.5-1995
Packing Vibration (non-operation)	Frequency range:10 HZ~50HZ Stroke:1.0mm,sweep:10 HZ ~50HZ x,y,z 2 hours for each direction	IEC60068-2-32：1990 GB/T2423.8-1995

7.3ESD

Test item	Conditions	Remark	
Electro Static Discharge Test (non-operation)	150pF，330Ω， Contact:±4KV,Air:±8KV	1	IEC61000-4-2：2001 GB/T17626.2-2006
	200pF，0Ω，±200V contact test	2	

Note: Measure point :
1. LCD glass and metal bezel
2. IF connector pins

8. General Precaution

8.1 Safety

1. Do not swallow any liquid crystal, even if there is no proof that liquid crystal ispoisonous.
2. If the LCD panel breaks, be careful not to get liquid crystal to touch your skin.
3. If skin is exposed to liquid crystal, wash the area thoroughly with alcohol or soap.

8.2 Storage Conditions

1. Store the panel or module in a dark place where the temperature is 23±5°C andThehumidity is below 50±20%RH.
2. Store in anti-static electricity container.
3. Store in clean environment, free from dust, active gas, and solvent.
4. Do not place the module near organics solvents or corrosive gases.
5. Do not crush, shake, or jolt the module.

8.3 Handling Precautions

(1) Avoid static electricity which can damage the CMOS LSI.
(2) The polarizing plate of the display is very fragile. So, please handle it verycarefully.
(3) Do not give external shock.
(4) Do not apply excessive force on the surface.
(5) Do not wipe the polarizing plate with a dry cloth, as it may easily scratch theSurface of plate.
(6) Do not use ketonics solvent & Aromatic solvent, use with a soft cloth soaked witha cleaning naphtha solvent.
(7) Do not operate it above the absolute maximum rating.
(8) Do not remove the panel or frame from the module.
(9)When the module is assembled, it should be attached to the system firmly,Be careful not to twist and bend the module.
(10)Wipe off water droplets or oil immediately. If you leave the droplets for a long time,staining and discoloration may occur.
(11) If the liquid crystal material leaks from the panel,it should be kept away from theeyes or mouthIn case of contact with hands,legs or clothes, it must be washedawaythoroughly with soap.

8.4 Warranty

(1)The period is within twelve months since the date of shipping out under normal using and storage conditions.
(2) Do not repaired or modified the LCM. It may cause function to lose efficacy, XianChuang does not warrant the LCM.
(3) All process and material comply ROHS.
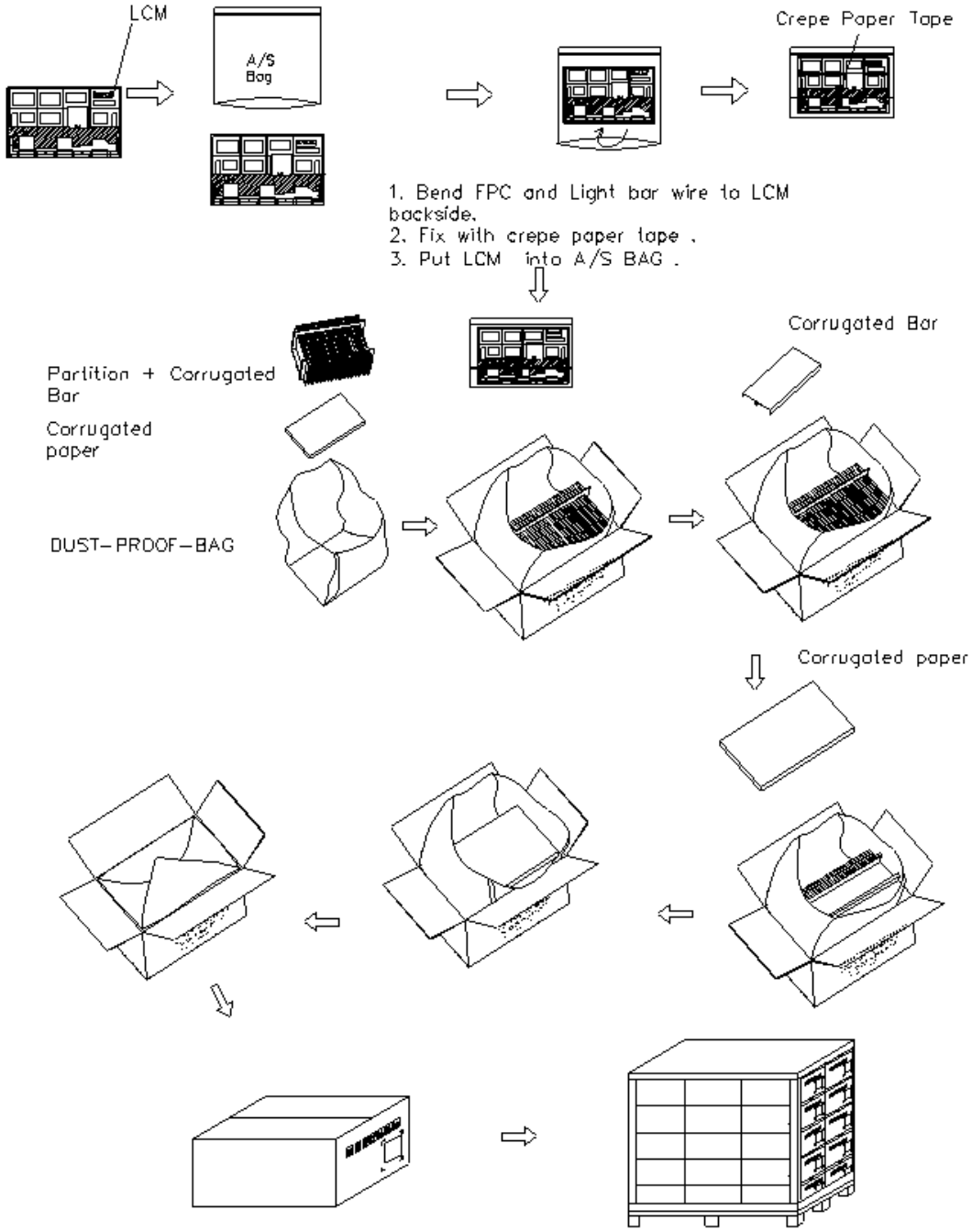
9. PACKAGE DRAWING